WEATHERLY 920

CATALOG J-7500

April 1975

Supersedes Catalog J-7200 and Supplements J-7300, J-7400

WALKER® Jacks

THE COMPLETE LINE *Products / Services*

WALKER®

Table of Contents

New No.	Previous No.	Description	Page No.
Hydraulic Service Jacks			
93632	J-122	1-1/2 Ton Cap. Service Jack	4
93630	——	1-1/2 Ton Cap. Service Jack (Rubber Wheels)	4
93633	J-121	1-1/4 Ton Cap. Road Service Jack	4
93635	——	1-1/4 Ton Cap. Racing Jack	4
93655	J-132	2 Ton Cap. Service Jack	5
93656	J-132R	2 Ton Cap. Service Jack (Rubber Wheels)	5
93663	J-612	2 Ton Cap. Air Op. Hyd. Service Jack	5
93667	——	4 Ton Cap. Air/Manual Hydraulic Service Jack	6
93664	J-613	4 Ton Cap. Air Op. Hyd. Service Jack	6
93657	J-134	4 Ton Cap. Service Jack	6
93665	J-614	10 Ton Cap. Air Op. Hyd. Service Jack	7
93658	J-780	10 Ton Cap. Service Jack	7
93731	——	20 Ton Cap. Air Op. Hyd. Low-Height Truck Jack	8
93730	J-255	20 Ton Cap. Air Op. Hyd. Medium-Height Truck Jack	8
93729	J-254	20 Ton Cap. Air Op. Hyd. High-Lift Truck Jack	8
End Lifts			
93688	J-102	1-1/2 Ton Cap. Hyd. End Lift	9
93690	J-104	1-1/2 Ton Cap. Hyd. Roll-To-Car End Lift	9
93689	J-103	1-1/2 Ton Cap. Air Op. End Lift	10
93691	J-105	1-1/2 Ton Cap. Roll-To-Car Air Op. End Lift	10
93686	J-197	2-1/2 Ton Cap. Heavy Duty Air End Lift	11
93827	J-96	1-3/4 Ton Cap. Mobile End Lift (Air Op.)	11
93692	J-199	7 Ton Cap. Heavy Duty Air End Lift	12
Transmission Jacks			
93711	J-44	1/4 Ton Cap. Mech. Trans. Jack	13
93716	J-45	1/2 Ton Cap. Hyd. Trans. Jack	13
93714	J-47	1/4 Ton Cap. Under Hoist Trans. Jack	14
93712	J-798	1/2 Ton Cap. Mech. Trans. Jack	14
93715	J-794	1 Ton Cap. Mech. Heavy Duty Trans. Jack	15
93717	J-795	1 Ton Cap. Hyd. Heavy Duty Trans. Jack	15
Specialized Equipment			
93615	——	10 Ton Cap. Bench Press	16
93616	J-840	15 Ton Cap. Shop Press	17
93230	——	15 Ton Cap. Shop Press Jack	17
93618	J-842	25 Ton Cap. Shop Fress	18
93234	——	25 Ton Cap. Shop Press Jack	18
93770	——	3/8 Ton Cap. Standard Eng. Stand	19
93774	——	5/8 Ton Cap. Heavy Duty Eng. Stand	19
93806	J-814	1/2 Ton Cap. Shop Crane	20
93809	J-815	3/4 Ton Cap. Shop Crane	20
93812	J-816	1 Ton Cap. Shop Crane	20
93815	J-817	2 Ton Cap. Shop Crane	20
93803	J-818	1/2 Ton Cap. Truck Mounted Crane	21
93765	J-823	3/4 Ton Cap. Wheel Dolly	22
93766	J-824	1-1/4 Ton Cap. Wheel Dolly	22
93279	——	Door And Bumper Handler	23
Portable Hydraulic Jacks			
93225	J-906	1-1/2 Ton Cap. Port. Hyd. Jack	24
93226	J-925	3 Ton Cap. Port. Hyd. Jack	24
93227	J-930	5 Ton Cap. Port. Hyd. Jack	24
93228	J-935	8 Ton Cap. Port. Hyd. Jack	24
93229	J-945	12 Ton Cap. Port. Hyd. Jack	24
93238	J-901	1-1/2 Ton Cap. High Lift Port. Hyd. Jack	24
93239	——	1-1/2 Ton Cap. High Lift Port. Hyd. Jack	24
93233	J-953	20 Ton Cap. Port. Hyd. Jack	25
93601	J-960	30 Ton Cap. Heavy Duty Hyd. Jack	25
93602	J-965	50 Ton Cap. Heavy Duty Hyd. Jack	25
93603	J-970	100 Ton Cap. Heavy Duty Hyd. Jack	25
Jack Stands			
93505	J-892	2 Ton Cap. Jack Stands	26
93516	J-895	5 Ton Cap. Jack Stands	26
93519	J-897	7 Ton Cap. Jack Stands	26
93506	J-202	3 Ton Cap. Jack Stands	26
93510	J-203	3 Ton Cap. Jack Stands	26
93513	J-195	2-1/2 Ton Cap. Rocker Jack Stands	26
93504	——	2 Ton Cap. Fixed Height Jack Stands	26
93450	——	Truck Wheel Chocks	26
93779	——	3/4 Ton Cap. Under Hoist Stand	27
93781	J-700	3/4 Ton Cap. Under Hoist Rocking Stand	27
93780	——	25 Ton Cap. Trailer Stabilizing Stand	27
93784	J-813	1-1/2 Ton Cap. Under Hoist Jack Stand	27
93522	J-810	10 Ton Cap. Jack Stands	27
93525	J-833	10 Ton Cap. Jack Stands	27
Passenger Car and Light Truck Jacks			
93471	J-210	3/4 Ton Cap. Scissors Jack	28
93472	J-110	1-1/2 Ton Cap. Scissors Jack	28
93479	J-425	3/4 Ton Cap. Tripod Screw Bumper Jack	28
93489	J-218	3/4 Ton Cap. Ratchet Bumper Jack	28
93494	J-213	1-1/4 Ton Cap. Ratchet Bumper Jack	28
93495	J-219	1 Ton Cap. Bipod Screw Bumper Jack	28
93496	——	1 Ton Cap. Ratchet Bumper Jack	28
Miscellaneous			
		Adapters & Accessories Section	29
		Hydraulic Jack Oil	29
93993	——	Jack Merchandiser Display	3
93538	——	Body-Jak Display Board	3
		Numerical Index	36-37
		Numerical Cross Reference	38
		Walker Service Depot Information	39
Body-Jak™ Portable Hydraulic Power Equipment			
93531	——	4 Ton Pump, Std. Ram & Hose Assy.	30
93535	——	10 Ton Pump, Std. Ram & Hose Assy.	30
93101	——	4 Ton Hydraulic Pump	30
93102	——	10 Ton Hydraulic Pump	30
93106	——	4 Ton Short Ram W/Extension Screw	30
93107	——	4 Ton Standard Ram	30
93110	——	10 Ton Short Ram W/Threaded Attach.	30
93111	——	10 Ton Standard Ram	30
93112	——	10 Ton Long Ram	30
93530	——	4 Ton Starter Kit	31
93533	——	4 Ton Deluxe Kit	31
93534	——	10 Ton Starter Kit	32
93537	——	10 Ton Deluxe Kit	32
93532	——	4 Ton Rescue Kit	33
93536	——	10 Ton Rescue Kit	33
93103	——	Air Operated Hydraulic Pump	34
93104	——	Air Operated Hydraulic Pump	34
93542	——	4 Ton Steel Tool Chest	35
93543	——	10 Ton Rescue Kit Tool Chest	35
93556	——	Steel Tool Stand	35
93108	——	Hydraulic Spreader	35
93190	——	Body-Jak Gauge	35
		High Pressure Fittings	35

© COPYRIGHT 1975 TENNECO INC. ALL RIGHTS RESERVED

93993 Jack Merchandiser

Set up a Walker jack merchandiser and let your customers know you're in the jack business!

This bright, bold display can easily increase your overall jack sales. It requires only six square feet of floor space. Yet it efficiently displays an assortment of portable hydraulic jacks, under axle jacks, bumper jacks, and hydraulic jack oil.

The merchandiser has three sturdy wood shelves supported by heavy duty anodized aluminum uprights. Assembly is easy...no nuts or bolts or tools required.

Display Dimensions: 52" high, base 36" X 24"

Jacks and hydraulic oil are packaged in one carton. Merchandising stand is shipped in a separate carton. Combined shipping weight: 240 lbs. Merchandising stand can be ordered separately. Order part number 93997. Shipping weight: 50 lbs.

93538 BODY-JAK™ Display Board

This colorful, attention-getting display presents an assortment of a Walker BODY-JAK™ pump, rams and attachments. The display can be free-standing or wall-mounted.

The 93538 includes:

- 1 - 93106 4 ton capacity short ram
- 1 - 93108 hydraulic spreader
- 1 - 93533 4 ton capacity deluxe kit
- 1 - 93621 display board

Display Dimensions: 24" wide X 48" high

Pump, rams and attachments are packed in one carton. Display board is shipped in a separate carton. Combined shipping weight: 87 lbs. Display board can be ordered separately. Order part number 93621. Shipping weight: 20 lbs.

Hydraulic Service Jacks

93632 1-1/2 Ton Capacity Hydraulic Service Jack

Ideal for road service calls. This compact jack is well suited for a variety of in-shop uses.

- Removable handle for transporting jack.
- Automatic valve prevents overloading.
- Full swivel rear casters and lifting cap for handling ease.
- Heavy duty steel side plates and bell crank for strength.
- Hydraulic pump sealed to keep out grit, grime and moisture.

93630 Protect your showroom floors and carpeting from damage with the **93630** (same as **93632**, but with soft, yet extremely durable, urethane wheels).

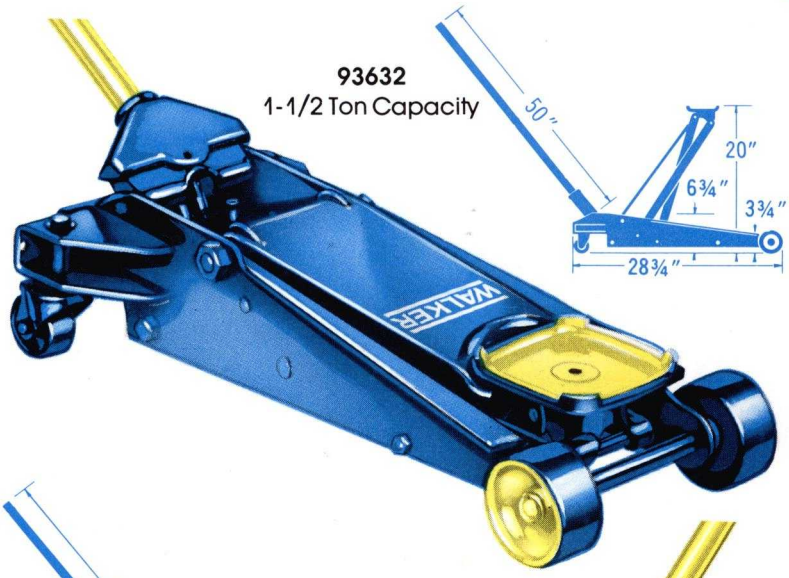

93633 1-1/4 Ton Capacity Hydraulic Service Jack

Perfect for road service work. Especially suited for use with smaller cars.

- Removable handle for easy transporting.
- Automatic valve prevents overloading.
- Full swivel rear casters and lifting cap for handling ease.
- Heavy duty steel side plates for extra strength.
- Hydraulic pump sealed for protection and long life.

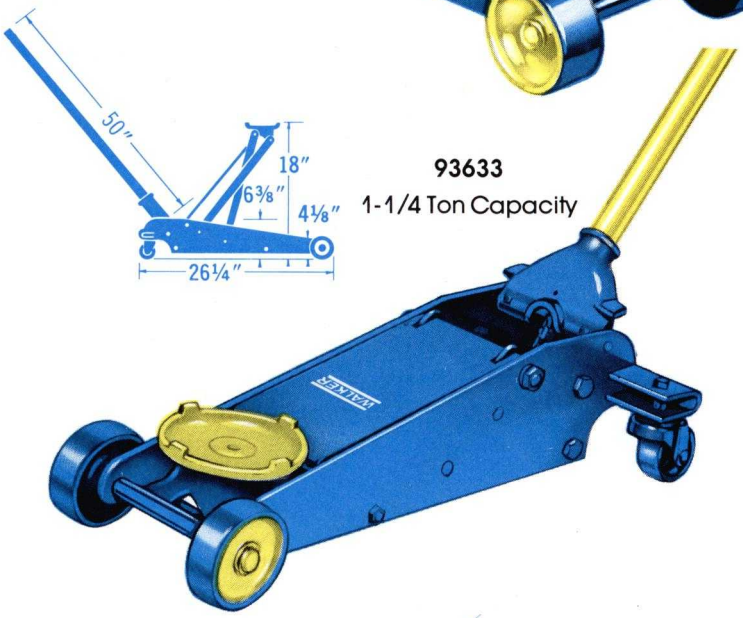

93635 1-1/4 Ton Capacity Racing Jack

The Walker racing jack is a specially designed dual purpose jack. It's perfect for the track or strip because the oversize hydraulic pump gives a 30 percent faster lift. With its compact size and easy handling, it doubles as a fine garage and service station jack.

- Lift cap can be locked in the optimum position.
- Skid plate and wide front wheels prevent sinking.
- Automatic valve prevents overloading.
- Removable handle with knurled section for good gripping.
- Rugged steel chassis and bellcrank.

After raising the vehicle, ALWAYS support it with jack stands before getting under it for any reason. These jacks are designed for lifting purposes only...not for supporting loads.

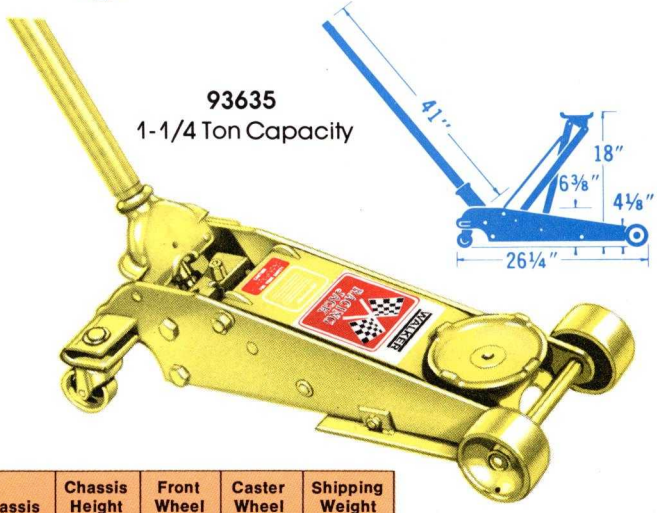

PART NO.	Capacity (lbs.)	Low Pickup Height	High Lifting Point	Power Raise	Cap Size	Handle Length	Chassis Length	Chassis Height (Max.)	Front Wheel (Dia.)	Caster Wheel (Dia.)	Shipping Weight (lbs.)
93632	3000	3¾"	20"	16¼"	6⅛" Sq.	50"	28¾"	6¾"	3¾"	2½"	100
93630	3000	4"	20¼"	16¼"	6⅛" Sq.	50"	28¾"	6¾"	4⅛"	2¼"	100
93633	2500	4⅛"	18"	13⅞"	5½" Dia.	50"	26¼"	6⅜"	3¾"	2½"	74
93635	2500	4⅛"	18"	13⅞"	5½" Dia.	41"	26¼"	6⅜"	3¾"	2½"	80

 For safe and proper use, always consult instructions accompanying product.

Hydraulic Service Jacks

WALKER®

93655 2 Ton Capacity

The two jacks shown on this page are designed for the bigger lifting jobs in service stations, garages and car dealerships. Farm operators and light truck fleet operators also find many uses for these Walker jacks. The following features apply to both jacks.

- Full swivel on rear casters and lifting cap for easy maneuvering.
- Extra strong steel side plates resist stress and twisting.
- Large control knob for load release.
- Automatic valve prevents overloading.
- Hydraulic units are sealed to keep out grit, grime and moisture.

93655 2 Ton Capacity Hydraulic Service Jack

- Extra long chassis reaches under low overhangs to get to the job.
- 3 position handle.
- Dual pump action provides speed to contact load and power for lifting.

93656 Same as **93655** except that it features soft, yet extremely durable urethane wheels...for quiet movement and protection for showroom floors, carpeting or tiled areas.

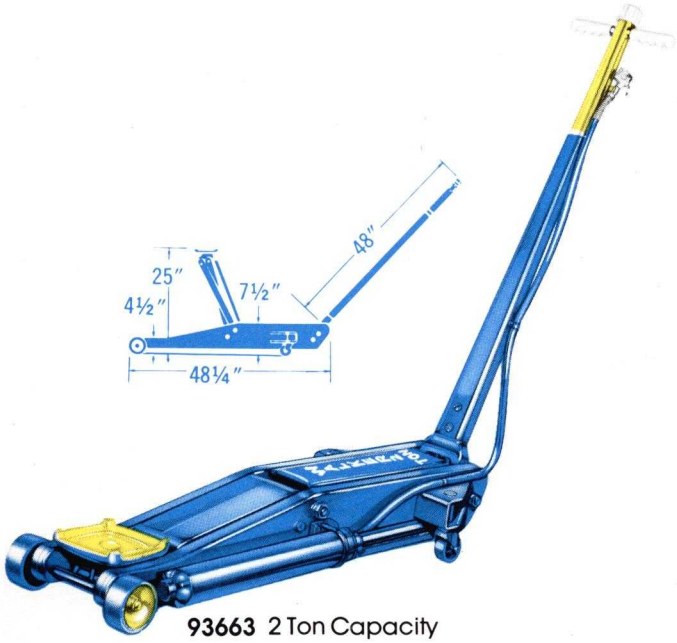

93663 2 Ton Capacity

93663 2 Ton Capacity Air Operated Hydraulic Service Jack

- Walker patented "Speed-Pak" provides a quick, effortless lift...lets air do the work for you.
- Long chassis reaches under low overhangs to get to the job.
- 3 position handle.

After raising the vehicle, ALWAYS support it with jack stands before getting under it for any reason. These jacks are designed for lifting purposes only...not for supporting loads.

PART NO.	Capacity (lbs.)	Low Pickup Height	High Lifting Point	Power Raise	Cap Size (Sq.)	Handle Length	Chassis Length	Chassis Height	Front Wheel (Dia.)	Caster Wheel (Dia.)	Min. psi for Rated Load	Shipping Weight (lbs.)
93655	4000	4½"	25"	20½"	7½"	48"	48¼"	7⅜"	3¾"	2½"	—	144
93656	4000	4¾"	25¼"	20½"	7½"	48"	48¼"	7⅜"	4⅛"	2¼"	—	144
93663	4000	4½"	25"	20½"	7½"	48"	48¼"	7⅜"	3¾"	2½"	130	160

Hydraulic Service Jacks

Here are three versatile 4 ton hydraulic service jacks from Walker. The first one can be operated with air pressure or manually. The second is air operated only. And the third one is operated manually. These jacks are ideal for all automotive and light truck repair facilities. They share these features:

- Full swivel rear casters and lifting cap for easy maneuvering.
- Extra long chassis reaches under low overhangs to get to the job.
- Extra strong steel side plates resist stress and twisting.
- Large control knob for handle positioning (3 positions) and load release.
- Automatic relief valve prevents overloading damage to the jack.
- Hydraulic units are sealed to keep out grit, grime and moisture.

93667 4 Ton Capacity Air/ Manual Hydraulic Service Jack

- Operates both manually and with air pressure. No matter where you are, this jack will get the job done.
- Walker patented "Speed Pak" provides a quick, effortless lift...lets air do the work for you.

93664 4 Ton Capacity Air Operated Hydraulic Service Jack

- Walker patented "Speed Pak" provides a quick, effortless lift...lets air do the work for you.

93657 4 Ton Capacity Hydraulic Service Jack

- Dual pump action provides speed to contact load and power for lifting.

NEW 93667
4 Ton Capacity

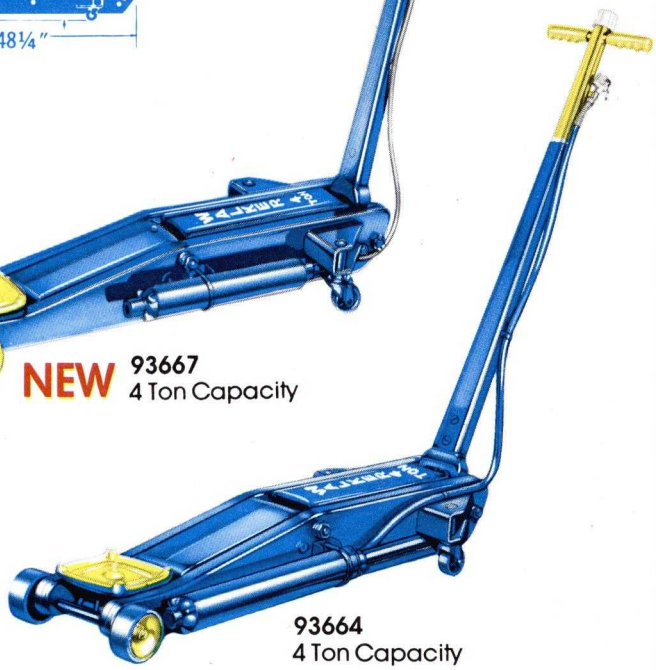

93664
4 Ton Capacity

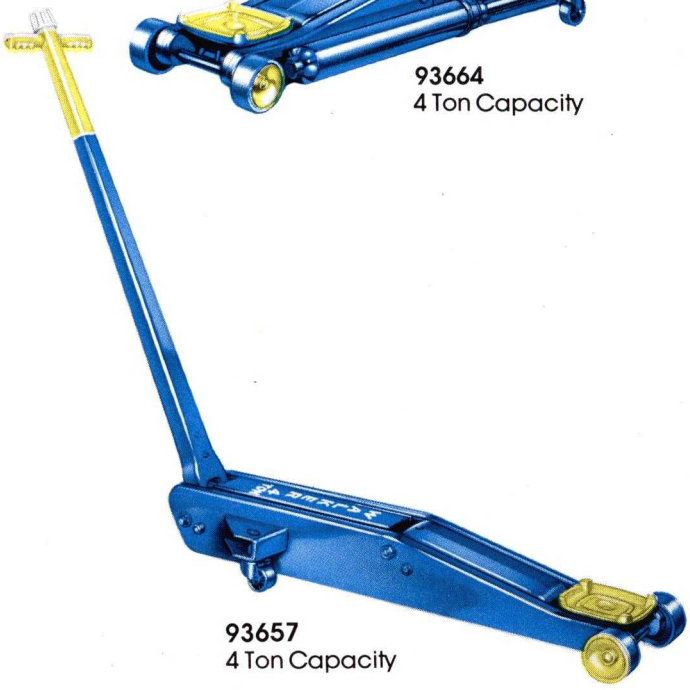

93657
4 Ton Capacity

After raising the vehicle, ALWAYS support it with jack stands before getting under it for any reason. These jacks are designed for lifting purposes only...not for supporting loads.

PART NO.	Capacity (lbs.)	Low Pickup Height	High Lifting Point	Power Raise	Cap Size (Sq.)	Handle Length	Chassis Length	Chassis Height (Max.)	Front Wheel Dia.	Caster Wheel Dia.	Min. psi for Rated Load	Shipping Weight (lbs.)
93667	8000	4½"	25"	20½"	7½"	48"	48¼"	7½"	4½"	2½"	130	195
93664	8000	4½"	25"	20½"	7½"	48"	48¼"	7½"	4½"	2½"	130	195
93657	8000	4½"	25"	20½"	7½"	48"	48¼"	7½"	4½"	2½"	—	181

 For safe and proper use, always consult instructions accompanying product.

WALKER®

"Heavy Duty"

93665
10 Ton Capacity

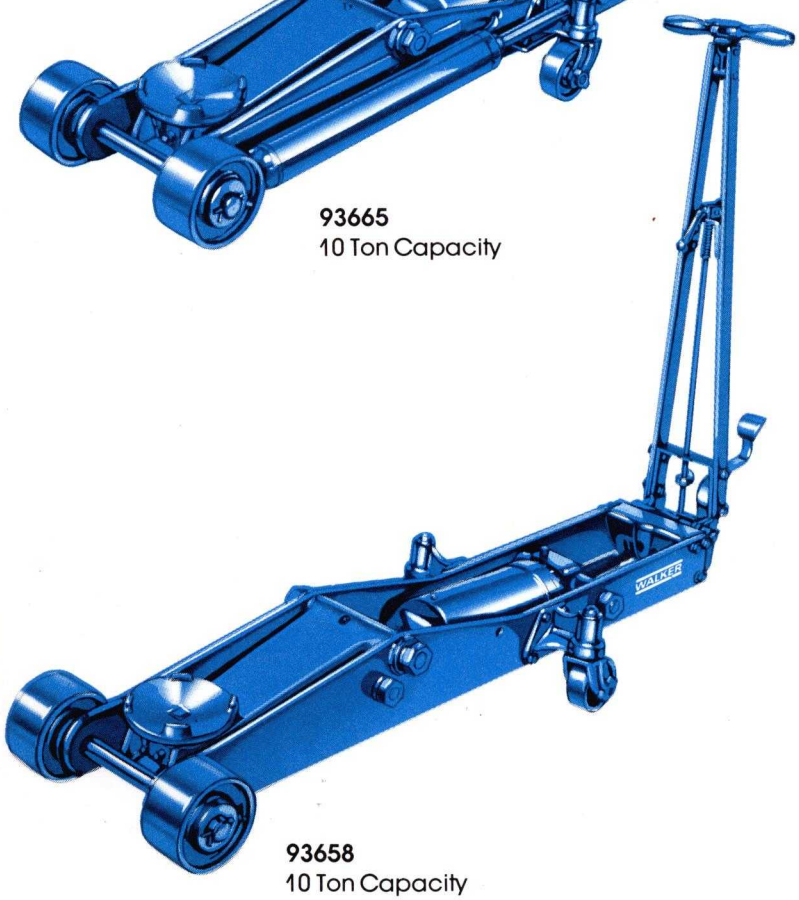

93658
10 Ton Capacity

These 10 ton capacity hydraulic service jacks are designed for heavy duty lifting work. They have been engineered for use in truck dealer service departments and fleet maintenance repair shops... anywhere heavy equipment is serviced.

- Rugged, heavy duty steel frame.
- Extra long chassis and handle reach under low overhangs to get to the job.
- Wide, roller bearing front wheels plus full swivel lifting cap and rear casters for easy maneuvering.
- Automatic relief valve prevents overloading damage to the jack.

93665 10 Ton Capacity Air Operated Hydraulic Service Jack

- Walker patented "Speed Pak" provides a quick, effortless lift...lets air do the work for you.
- Two-speed lifting action...speed to contact load, power to raise it.
- Built-in water separator protects unit from corrosion.
- Operates to capacity with air pressure of 160 psi.

93658 10 Ton Capacity Hydraulic Service Jack

- Foot pump pedal provides fast load contact.
- Load can be released with foot operated pedal or with handle lever.
- Three position handle.

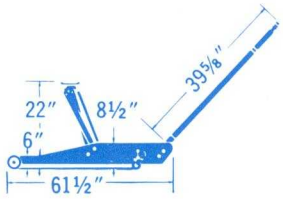

93665 93658

After raising the vehicle, ALWAYS support it with jack stands before getting under it for any reason. These jacks are designed for lifting purposes only...not for supporting loads.

PART NO.	Capacity (lbs.)	Low Height Pickup	High Lifting Point	Power Raise	Cap Size Dia.	Handle Length	Chassis Length	Chassis Height (Max.)	Front Wheel Dia.	Caster Wheel Dia.	Min. psi for Rated Load	Shipping Weight (lbs.)
93665	20,000	6"	22"	16"	7¼"	39⅝"	61½"	8½"	6"	4"	160	381
93658	20,000	6"	22"	16"	7¼"	39⅝"	61½"	8½"	6"	4"	—	357

Hydraulic Service Jacks

Here's a unique assortment of Walker 20 ton capacity air operated hydraulic service jacks. They're especially useful for fleet garages, heavy equipment repair shops, and over-the-road truck and trailer service calls.

- Compact and portable...easy to transport.
- Walker patented "Speed Pak" provides a quick, effortless lift...lets air do the work for you.
- Large semi-pneumatic rubber tires make them easy to move around.
- Two-speed lifting action...speed to contact load and power to raise it.
- Automatic relief valve prevents overloading damage to the jack.
- Built-in water separator provides corrosion protection.

93731
20 Ton Capacity

93730
20 Ton Capacity

93729
20 Ton Capacity

93731 20 Ton Capacity Air Operated Hydraulic Service Jack

- Low height version for lifting loaded trailers and trucks by axles.

93730 20 Ton Capacity Air Operated Hydraulic Service Jack

- Medium height version for contacting suspension and frame lifting points.

93729 20 Ton Capacity Air Operated Hydraulic Service Jack

- Extra high pick-up height for lifting loaded trailers by body frame members.

93269

93269 V-block adapter used on 93731, 93730, and 93729 for lifting on axles and other curved surfaces.

After raising the vehicle, ALWAYS support it with jack stands before getting under it for any reason. These jacks are designed for lifting purposes only...not for supporting loads.

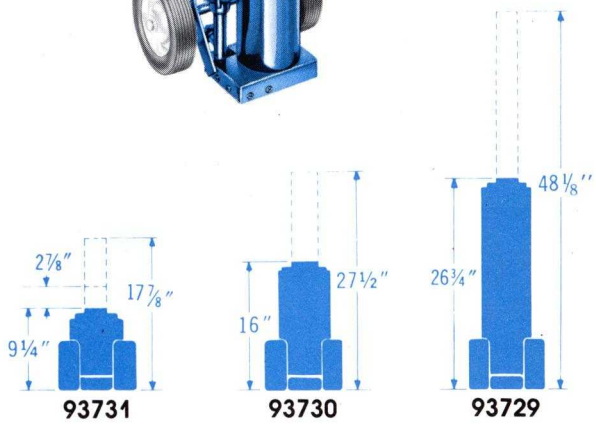

PART NO.	Capacity (lbs.)	Low Pickup Height	High Lifting Point	Power Raise	Extension Screw	Ram Diameter	Base Size	Handle Length	Min. psi for Rated Load	Shipping Weight (lbs.)
93731	40,000	9¼"	17⅞"	5¾"	2⅞"	2 3/16"	8" x 5½"	50"	140	88
93730	40,000	16"	27½"	11½"	—	2 3/16"	8" x 5½"	50"	140	112
93729	40,000	26¾"	48⅛"	21⅜"	—	2¼"	7" x 5½"	40"	140	128

 For safe and proper use, always consult instructions accompanying product.

93688
1-1/2 Ton Capacity

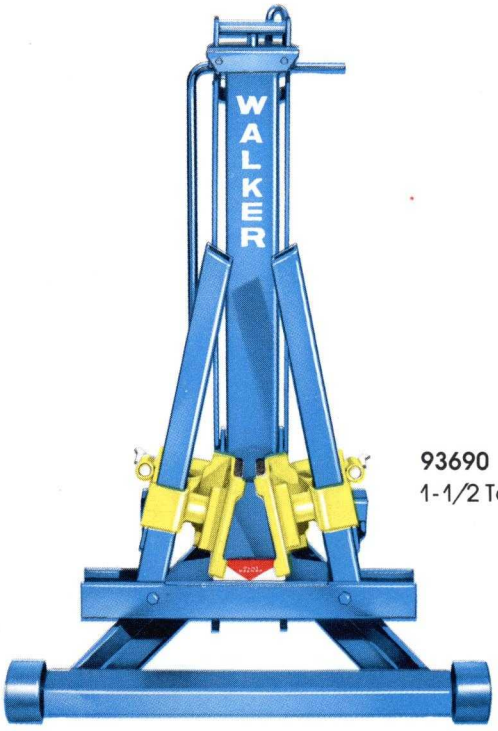

93690
1-1/2 Ton Capacity

Walker end lifts are specially designed for high lifting and convenient servicing of late model cars. They are ideally suited for car dealers, service stations and repair garages.

- These jacks, with an extra wide saddle spread (19" to 64-1/2") and 4-position lifting saddles are designed to pick up early as well as late model cars. Lifting saddles are included with end lifts.
- Ribbed rubber pads (4" x 7") on saddles assures maximum grip and load contact.
- Multi-position locks prevent accidental lowering under load.
- V-bar support base provides maximum stability.
- Arms fold up for compact storage and easy maneuverability in work areas.
- Hydraulic unit is enclosed and protected in steel column.

93688 1-1/2 Ton Capacity Hydraulic End Lift

- 8" semi-pneumatic tires provide easy maneuvering.
- Spring loaded front casters permit base to contact ground under load for extra stability and support.

93690 1-1/2 Ton Capacity Hydraulic Roll-To-Car End Lift

- Two load bearing wheels up front allow jack to roll to the car.
- Two swivel casters at the rear make maneuvering easy.

93795

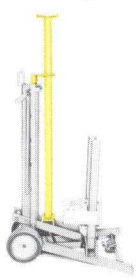

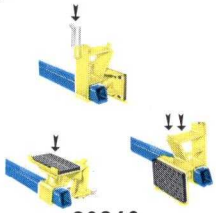

93268

93795 High lift adapter provides added lifting range from 57" to 83" for under hoist jobs (OPTIONAL).

93268 4-point lifting saddles included with 93688 and 93690.

After raising the vehicle, ALWAYS support it with jack stands before getting under it for any reason. These jacks are designed for lifting purposes only...not for supporting loads.

PART NO.	Capacity (lbs.)	Low Pickup Height	High Lifting Point	Power Raise	Saddle Spread	Clearance (Lifting column to front of saddle)	Shipping Weight (lbs.)
93688	3000	9″	35¾″	26¾″	19″-64½″	15″	186
93690	3000	9¼″	36″	26¾″	19″-64½″	15″	188

End Lifts

Walker air operated end lifts are specially designed for high lifting and convenient servicing of late model cars. They are ideally suited for car dealers, service stations and repair garages.

- Air operation provides an effortless lift. Two stage air valve permits selection of desired lifting speed.
- These jacks, with an extra wide saddle spread (19" to 64-1/2") and 4-position lifting saddles are designed to pick up early as well as late model cars. **93268** lifting saddles are included with end lifts.
- Ribbed rubber pads (4" x 7") on saddles assure maximum grip and load contact.
- Multi-position locks prevent accidental lowering under load.
- V-bar support base provides maximum stability.
- Arms fold up for compact storage and easy maneuverability in work areas.

93689
1-1/2 Ton Capacity

93689 1-1/2 Ton Capacity Air Operated End Lift

- 8" semi-pneumatic tires provide easy maneuvering.
- Spring loaded front caster permits base to contact ground under load for maximum stability and support.

93691 1-1/2 Ton Capacity Roll-To-Car Air Operated End Lift

- Two load bearing wheels up front allow jack to roll to the car.
- Two swivel casters at the rear make maneuvering easy.

93691
1-1/2 Ton Capacity

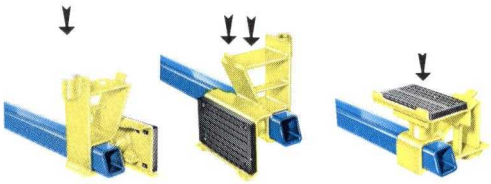

93268 4-point lifting saddles included with 93689 and 93691.

After raising the vehicle, ALWAYS support it with jack stands before getting under it for any reason. These jacks are designed for lifting purposes only...not for supporting loads.

PART NO.	Capacity (lbs.)	Low Pickup Height	High Lifting Point	Power Raise	Saddle Spread	Min. psi for Rated Load Clearance	(Lifting col. to front of saddle)	Shipping Weight (lbs.)
93689	3000	9"	36¾"	27¾"	19-64½"	135	14"	194
93691	3000	9¼"	37"	27¾"	19-64½"	135	14"	197

 For safe and proper use, always consult instructions accompanying product.

93686 Pressure/Load Chart	
Air Pressure, P. S. I.	Load
150	5000 lbs.
130	4300 lbs.
100	3250 lbs.

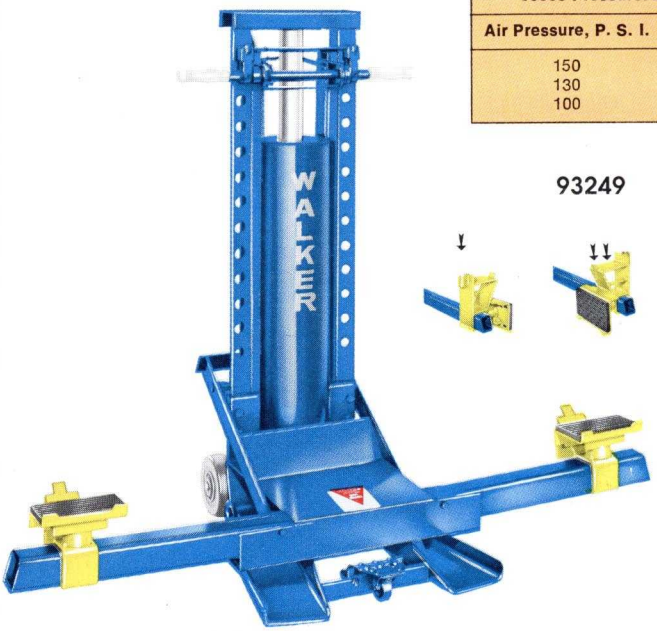

93249

93686 2-1/2 Ton Capacity

93686 2-1/2 Ton Capacity Air Operated End Lift

Wide reach and easy maneuverability make this an excellent jack for service stations, car dealers, garages and light truck maintenance shops.

- Specially designed for convenient servicing of early and late model cars and light trucks.
- Ribbed rubber pads (4" x 7") assure maximum grip and load contact. Saddle adapters are specially designed for slotted bumpers.
- Maneuvers easily with spring loaded front caster and 6" rubber wheels.
- Double locks with 12 positions prevent accidental lowering.
- Air hose may be disconnected for other uses.
- Lifting arms fold for compact storage.

93249 4-point lifting saddles included with 93686.

PART NO.	Capacity (lbs.)	Low Pickup Height		High Lifting Point		Power Raise	Saddle Spread	Min. psi for Rated Load	Clearance (Lifting column to front of saddle)	Shipping Weight (lbs.)
		Saddles	Column Top	Saddles	Column Top					
93686	5000	10"	48½"	38¾"	77¼"	28¾"	19½"-64½"	150	14⅜"	252

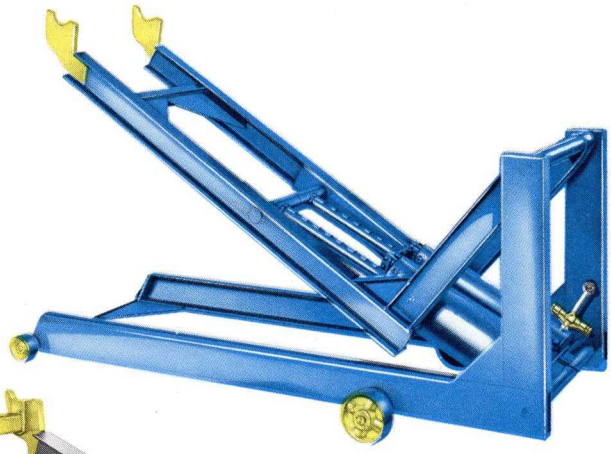

93827 1-3/4 ton capacity

93264 Optional front end frame lifting adapter

After raising the vehicle, ALWAYS support it with jack stands before getting under it for any reason. These jacks are designed for lifting purposes only...not for supporting loads.

93827 1-3/4 Ton Capacity Air Operated End Lift

Walker's high reaching end lift will lift a car by its axle or front frame cross member. The high lift provides extra work space under the vehicle and will free your hoists for other jobs.

- Heavy gauge steel channel and I-beam construction.
- Stores in an upright position...requires less than 3' x 3' of floor space.
- Wide spread lifting arms assure load stability at highest raise.
- Includes 93264 adapter designed to reach under low vehicles for lifts on front frame cross member.
- Twin air tanks offer low silhouette for minimum interference with bumpers, gas tanks, axles, hitches.
- Twin locks engage automatically during lifts.
- Air hose may be disconnected for other uses.

93264 optional front end frame lifting adapter.

PART NO.	Capacity (lbs.)	Low Pickup Height		High Lifting Point		Power Raise	Distance Between Lifting Hooks	Max. Reach	Chassis Length	Chassis Height	Max. Width	Min. psi for Rated Load	Shipping Weight (lbs.)
		w/Adapter	w/o Adapter	w/Adapter	w/o Adapter								
93827	3500	6"	7½"	55"	53½"	47½"	19⅝"	66¼"	80¾"	35"	35"	145	560

93692 7 Ton Capacity Air Operated End Lift

This Walker end lift is designed, engineered and constructed for heavy duty lifting. It can handle the big jobs in truck fleet maintenance garages, truck dealer repair shops, and anywhere heavy equipment is serviced.

- 6" spring loaded front caster is not connected to the lifting arm assembly. The jack has full mobility and can be realigned at any time before load contact is made.
- 10" fully pneumatic rubber wheels at the rear make maneuvering easier.
- Saddles rotate in 90 degree increments for either bumper or frame lifting. Saddles adjust to 10 different heights.
- Lifting arms telescope for compact storage.
- Twin locks with 7 positions prevent accidental lowering.
- Approximate overall dimensions: 59-1/2" high, 28" wide, 35" deep.
- Air hose may be disconnected for other uses.

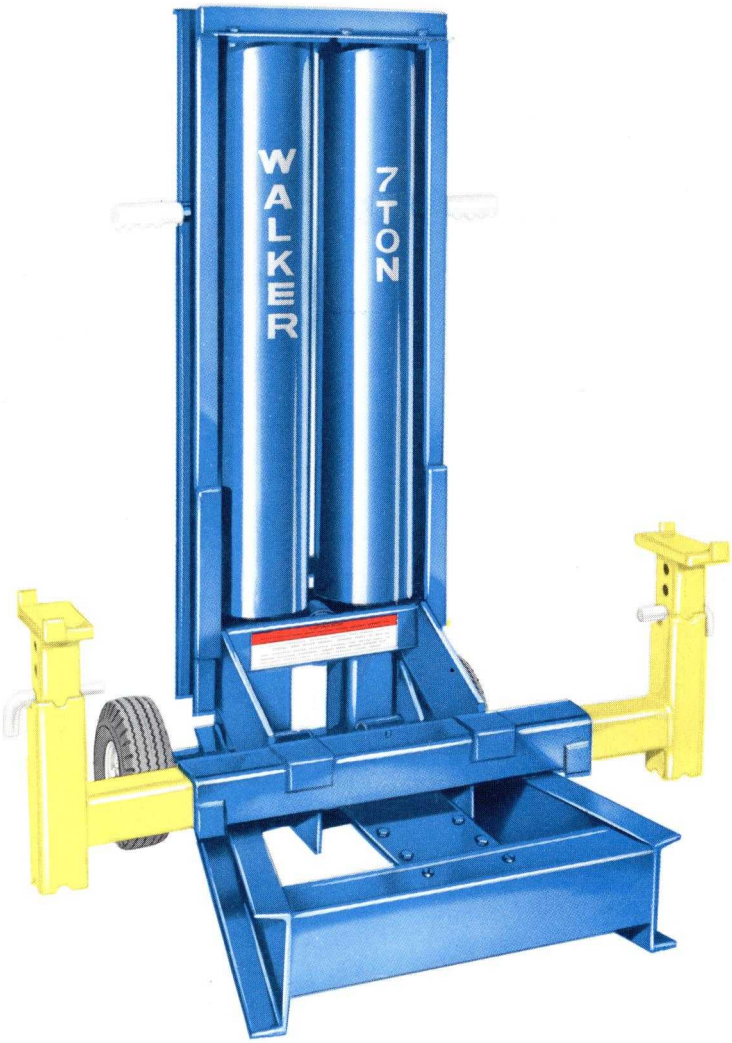

93692
7 ton capacity

After raising the vehicle, ALWAYS support it with jack stands before getting under it for any reason. These jacks are designed for lifting purposes only...not for supporting loads.

93692 Pressure/Load Chart	
Air Pressure, P.S.I.	**Load**
200	14,000 lbs.
180	12,500 lbs.
160	11,000 lbs.
140	9,500 lbs.
120	8,000 lbs.

PART NO.	Capacity (lbs.)	Low Pickup Height	High Lifting Point	Power Raise	Saddle Spread	Min. psi for Rated Load	Lifting col. to front of saddle	Ship. Wt. (lbs.)
93692	14,000	13½"	58½"	32½"	29"-47"	200	12¾"	570

WALKER®

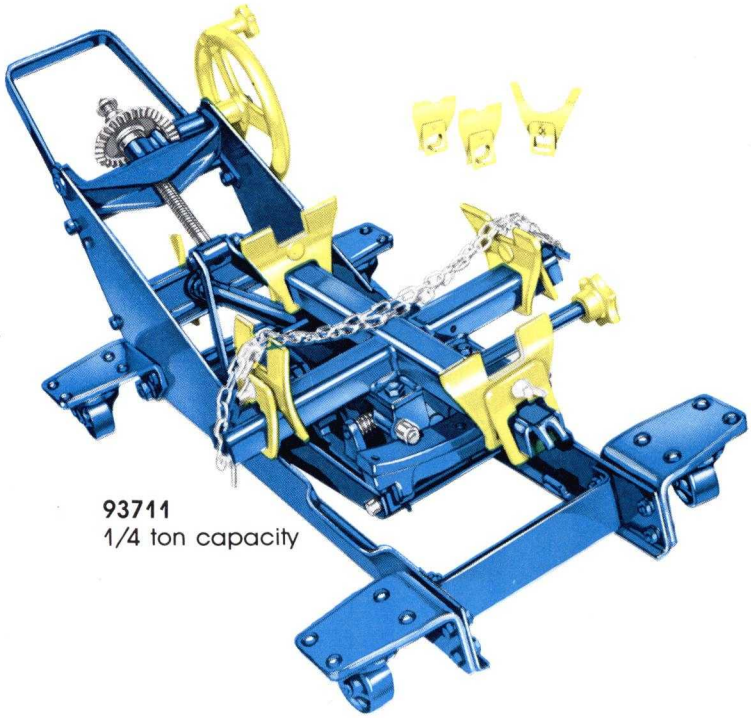

93711
1/4 ton capacity

Walker 93711 and 93716 Transmission Jacks

Easily handle all passenger car automatic transmissions. Real time and labor savers for car dealers, service stations, automatic transmission specialists, and repair garages.

- Aligns splines and bolt holes...easily adjusted to .030 inch or less.
- Maneuvers and positions easily with four full 360 degree swivel ball bearing casters.
- Wide support base provides stability.

93258

93246

93258 Optional adapter available for Toronado and El Dorado transaxles.
93246 Optional adapter available for 1962 and earlier Power Glide transmissions.

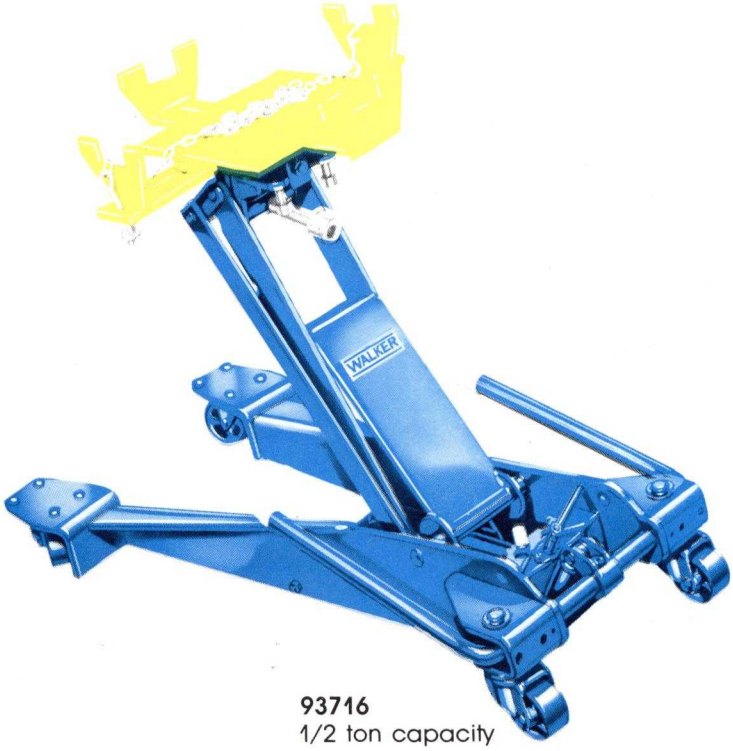

93716
1/2 ton capacity

93711 1/4 Ton Capacity Mechanical Transmission Jack

Completely mechanical operation gives micro-accurate adjusting, tilting, lowering and raising.

- Lifting head tilts 75 degrees forward, 18 degrees backward, and 10 degrees sideways, right or left.
- A chain plus an assortment of pick up blades are included to hold a wide range of old and new transmissions.

93716 1/2 Ton Capacity Hydraulic Transmission Jack

Designed to handle all passenger car and most light truck automatic transmissions. Its smooth hydraulic operation permits precise raising and lowering.

- Lifting head tilts 60 degrees forward, 18 degrees backward and 12 degrees sideways, right or left.
- Double pump handle allows jack to be operated from either side.

PART NO.	Capacity (lbs.)	Low Pickup Height	High Lifting Point	Lifting Head Size (max.)	Lifting Head Size (min.)	Chassis Length	Max. Chassis Width	Caster Wheel Dia.	Forward Tilt	Rearward Tilt	Sideways Tilt	Shipping Weight (lbs.)
93711	500	8¾″	26¾″	13″ x 16½″	5½″ x 5½″	43¼″	20¼″	2½″	75°	18°	10° R&L	130
93716	1000	8½″	27⅛″	16¾″ x 16¾″	10⅛″ x 10⅛″	33¼″	19¼″	2½″	60°	18°	12° R&L	111

Transmission Jacks

93714 1/4 Ton Capacity Hydraulic High Lift Transmission Jack

Easily handles all passenger car automatic transmissions. Two stage hydraulic ram provides high raise...excellent for use under hoists for car dealers, service stations, and automatic transmission specialists.

- Wide angle tilt range for perfect alignment – 80 degrees forward, 18 degrees backward, and 10 degrees sideways, right or left.
- Foot operated pump and release leaves operator's hands free for adjustments.
- A chain plus an assortment of pickup blades are included to hold a wide range of old and new transmissions.
- Wide 38" x 38" base with 4 full swivel ball bearing casters provide stability and easy maneuvering.

93714 1/4 ton capacity

93258

93246

93258 Optional adapter available for Toronado and El Dorado transaxles.
93246 Optional adapter for Power Glide transmissions.

93712 1/2 Ton Capacity Mechanical Transmission Jack

Designed to handle the intermediate sizes of truck transmissions.

- Rugged frame set close to the floor for extra clearance. Low 3" saddle pickup height.
- Convenient ratchet handle is designed for close tolerance work and one man operation.
- Four large ball bearing casters are set wide for stability...full 360 degree swivel for easy maneuvering.

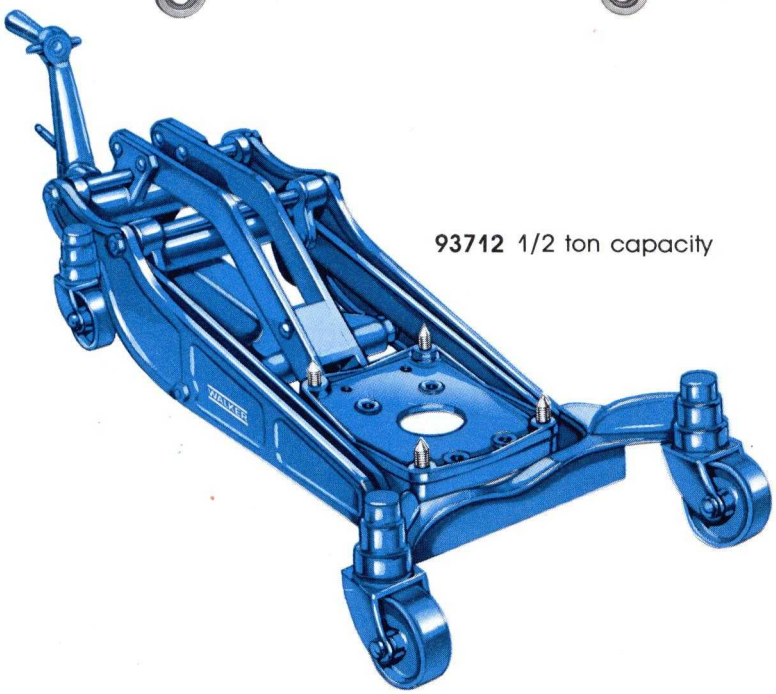

93712 1/2 ton capacity

PART NO.	Capacity (lbs.)	Low Pickup Height	High Lifting Point	Lifting Head Size	Caster Wheel Diameter	Chassis Length	Chassis Width	Forward Tilt	Rearward Tilt	Sideways Tilt	Shipping Weight (lbs.)
93714	500	38½"	77"	13" x 16½"	4"	38"	38"	80°	18°	10° R&L	207
93712	1000	3"	27"	10" x 10¼"	2½"	48"	23½"	—	—	—	136

 For safe and proper use, always consult instructions accompanying product.

WALKER®

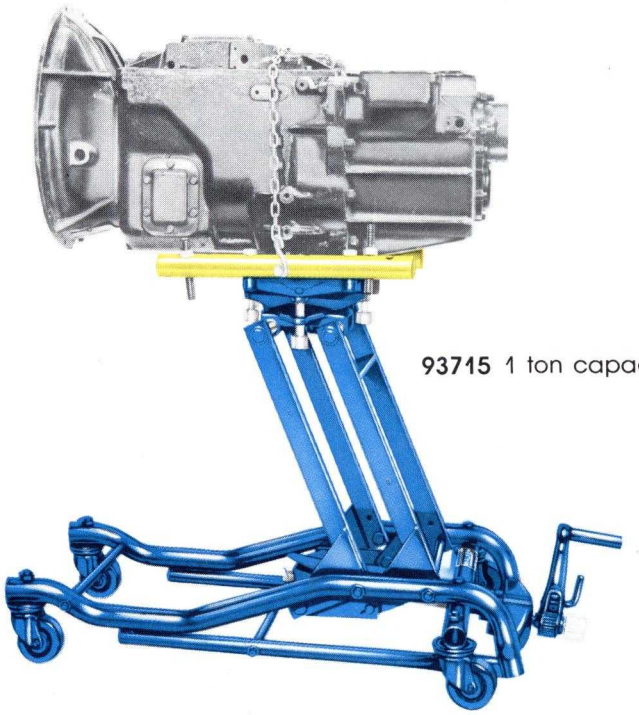

93715 1 ton capacity

93717 1 ton capacity

Walker 1 Ton Capacity Transmission Jacks

Designed for truck dealers, fleet maintenance shops, and heavy duty transmission repair centers. Easily adapted for handling differentials and torque converters.

- Low frame design easily clears under carriage obstacles...especially handy when working on cab-over-engine trucks.
- Lifting head and adapter mechanism tilts 10 degrees right, left, forward or backward. Adjustments can be made by hand or with a 1/2" square drive socket wrench.
- 4" full swivel roller bearing casters make dollying easy.

93251

93250

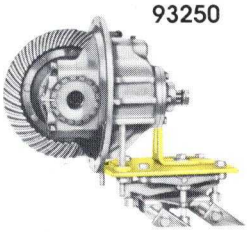

93250 Optional differential adapter available.
93251 Optional Allison automatic transmission adapter available.

93715 1 Ton Capacity Mechanical Transmission Jack

Ball bearing screw allows incremental height adjustments with minimum handle effort.

93717 1 Ton Capacity Hydraulic Transmission Jack

Smooth, hydraulic operation permits precise positioning. Double pump handle allows jack to be operated from either side.

PART NO.	Capacity (lbs.)	Low Pickup Height	High Lifting Point	Lifting Head Size (Max. Sq.)	Caster Wheel Diameter	Overall Length	Overall Width	Overall Height	Forward Tilt	Rearward Tilt	Sideways Tilt	Shipping Weight (lbs.)
93715	2,000	10″	36″	10″	4″	53″	29½″	10″	10°	10°	10°	218
93717	2,000	10″	36″	10″	4″	50¼″	29½″	10″	10°	10°	10°	248

93615 10 Ton Capacity Bench Press

- Straightens, bends, holds, presses.
- Removes and installs gears, bushings, universal joints, wrist pins, pulleys, etc.
- Compact, bench mounted.
- Includes frame, ram adapter and 93247 bearing safety shield as standard equipment.

93615
10 Ton Capacity

Suggested Body-Jak™ components to be used with 93615 bench press:

1. 93535 10 ton capacity Body-Jak™ unit... or
2. 93102 10 ton capacity Body-Jak™ pump, 93111 standard ram or 93112 long ram, 93186 hose, and 93184 hose half quick coupler...or
3. 93103 air operated hydraulic Body-Jak™ pump, 93111 standard ram or 93112 long ram, 93186 hose, and 93184 hose half quick coupler...or
4. 93104 air operated hydraulic Body-Jak™ pump, 93111 standard ram or 93112 long ram, 93186 hose, and 93184 hose half quick coupler.

Optional accessories for 93615 bench press:

93244 Bearing separator support set

93240 Bearing separator

93247 Bearing safety shield. (One is included with 93615 press.)

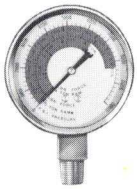

93190 Body-Jak gauge and appropriate 3/8" fittings (93199 tee and 93191 close nipple)

PART NO.	Capacity (Tons)	Height	Base (Width)	Press Bed (Width)	Press Bed (Depth)	Working Range (Ram to Bed)	Shipping Weight (lbs.)
93615	10	26½″	20¾″	Outside—18″ Inside—15″	5¾″	*14¼″ to 8¼″ **14¼″ to 4¼″	100

*w/93111 **w/93112

 For safe and proper use, always consult instructions accompanying product.

WALKER®

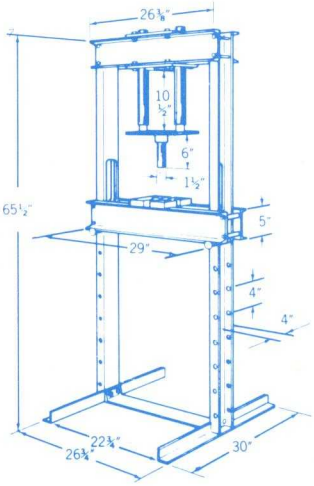

93616 15 Ton Capacity Hydraulic Shop Press

Designed for automotive, industrial and general shop work. This press straightens, bends and presses.

- Removes and installs gears, axle bearings, bushings, universal joints, wrist pins, pulleys, drive shaft bearings and handles many other jobs.
- Includes frame, press bed and arbor plates (3" x 7-3/4" x 1") with adjustable 1" and 2" cutouts to position shafts up to 2" in diameter.
- Also includes 93247 bearing safety shield as standard equipment.
- Ram retracts automatically by enclosed return springs when release valve is opened.
- 5" adjustable press bed has nine working positions at 4" intervals.
- 4" rigid channel steel frame.
- Compact 26-3/4" x 30" base.
- Steel cross brace prevents spreading under load.

93616
15 ton capacity

PART NO.	Capacity (tons)	Height	Base (width)	Press Bed (width)	Base (Depth)	Press Bed (Depth)	Ram Travel	Working Range (Ram to Bed)	Shipping Weight (lbs.)
93616	15*	65½"	26¾"	Outside—29" Inside—23¼"	30"	7½"	5½"*	Min. 2⅜" Max. 34¼"	210

*w/93230

Optional Accessories

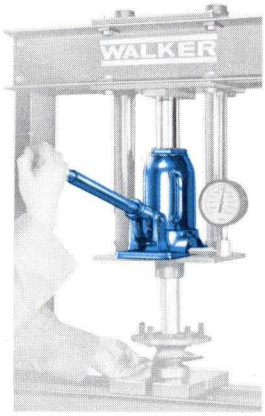

93247
Bearing safety shield. (One is included with 93616 press.)

93242
Extra arbor plates for 93616. (One set included with press.)

93254
Bearing separator adapter for bearings, pulleys, gears.

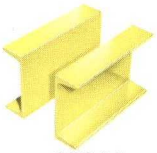

93244
Bearing separator support set.

93259
Hydraulic pressure gauge and hex connector for 93230 15 ton capacity press jack.

93617
Extra press bed (5" channel)

93260
Short ram for extra long shafts.

93230 15 ton capacity press jack. Specifically designed for use in 93616 press.

- Automatic relief valve provides protection against overloading the equipment.
- Mounting holes are provided in the base of the jack so that it can be bolted securely into the press.

PART NO.	Capacity (lbs.)	Height (Closed)	Maximum Height	Power Raise	Ram Diameter	Effective Ram Area (Sq. In.)	Base Size	Handle Length	Shipping Weight (lbs.)	Handle No.
93230	30,000	10"	15½"	5½"	1¾"	2.59	4¾" x 7½"	20½"	26	10667

93618 25 Ton Capacity Hydraulic Shop Press

Engineered for heavy duty automotive, industrial and general shop work such as bending, straightening, holding and pressing.

- Removes and installs gears, axle bearings, bushings, universal joints, wrist pins, pulleys, drive shaft bearings and performs many other jobs.
- Includes frame, press bed and arbor plates (3-1/2" x 9-1/4" x 1-1/2") with adjustable 1" and 2" cutouts to position shafts up to 2" in diameter.
- Also includes 93247 bearing safety shield as standard equipment.
- Ram automatically retracts by enclosed return springs as release valve is opened.
- 5" rigid channel steel frame.
- 6" adjustable press bed has ten working positions at 4" intervals.
- Rugged steel ram.
- Steel cross brace prevents spreading under load.
- Compact 26-3/4" x 36" base.

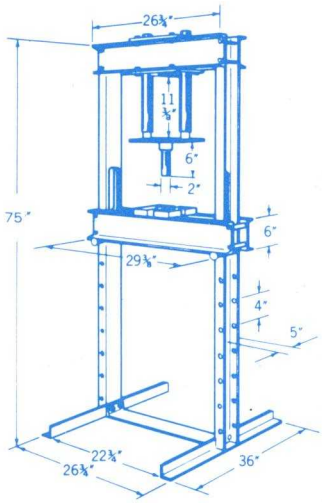

93618
25 ton capacity

PART NO.	Capacity (tons)	Height	Base (width)	Press Bed (width)	Base (depth)	Press Bed (depth)	Ram Travel	Working Range (Ram to Bed)	Shipping Weight (lbs.)
93618	25*	75"	26¾"	Outside—29⅜" Inside—23¼"	36"	9¼"	7¾"*	Min.—3½" Max.—39½"	314

*w/93234

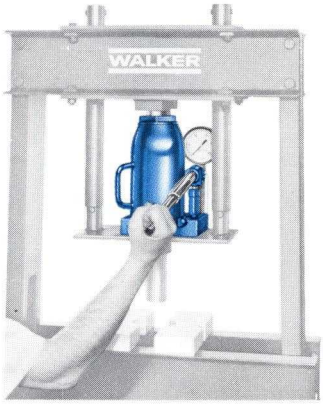

93234 25 ton capacity press jack. Specifically designed for use in 93618 press.

- Automatic relief valve provides protection against overloading the equipment.
- Mounting holes are provided in the base of the jack so that it can be bolted securely into the press.

Optional Accessories

93247
Bearing safety shield. (One is included with 93618 press.)

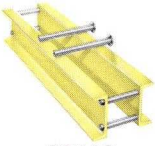

93619
Extra press bed (6" channel).

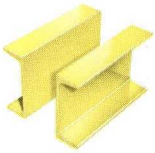

93244
Bearing separator support set.

93243
Extra arbor plates for 93618. (One set included with press.)

93275
Bearing separator adapter for bearings, pulleys, gears.

93262
Hydraulic pressure gauge and hex connector for 93234 25 ton capacity press jack.

PART NO.	Capacity (lbs.)	Height (Closed)	Power Raise	Maximum Height	Effective Ram Area (Sq. In.)	Ram Diameter	Base Size	Handle Length	Shipping Weight (lbs.)	Handle No.
93234	50,000	10⅞"	7¾"	18½"	4.21	2¼"	5½" x 7"	20½"	45	10667

 For safe and proper use, always consult instructions accompanying product.

93770
standard engine stand

93774
heavy duty engine stand

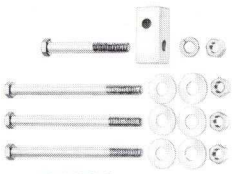

93284
VW adapter

93282
transmission head

93283 outboard
motor head

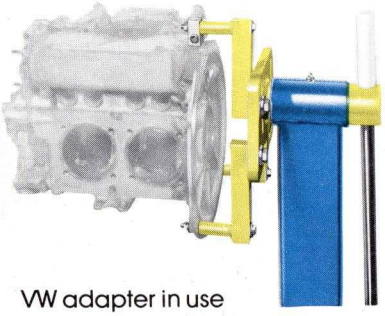

VW adapter in use

Walker Engine Stands

Perfect for auto mechanics, engine rebuilders, auto hobbyists and amateur professional racers.

- Long handle, used with any of the heads, helps the mechanic rotate the head to the desired position.
- Head swivels 360 degrees for easy accessibility to any part of the engine. Chained lock pin can be inserted to lock the head at 45 degree increments.
- Adjustable mounting arms permit attachments to regular engine mounting holes. Each stand includes 8 high strength engine mounting bolts (4) 3/8" x 4" Lg. and (4) 7/16" x 4" Lg.
- Full swivel, ball bearing casters provide easy maneuvering under load.

93770 Standard Engine Stand

- Full 750 lb. capacity
- Stand includes basic engine head and 8 engine mounting bolts.

93774 Heavy Duty Engine Stand

Specially designed for heavy duty use in truck fleet maintenance shops and truck dealerships.

- With 1250 lb. capacity, this stand easily handles heavier truck engines, transmissions and differentials.
- Stand includes the heavy duty engine head and 8 engine mounting bolts.

Optional Accessories

93282 transmission head

- Fits Walker 93774 engine stand only.
- 500 lb. capacity.
- Shipping wt. – 10 lbs.

93283 outboard motor head

- Fits both Walker engine stands.
- Handles all outboards built to date plus some inboard/outboard drives.
- 3/4" wood face backed with a 3/8" steel plate.
- 750 lb. capacity.
- Shipping wt. – 24 lbs.

93284 VW adapter

- Adapter fits both Walker engine stands for mounting any VW air cooled engine.
- Shipping wt. – .5 lbs.

PART NO.	Capacity (lbs.)	Height (In.)	Width (In.)	Length (In.)	Ship. Wt. (lbs.)
93770	750	35.25	34.00	42	78
93774	1250	35.25	34.00	42	112

For safe and proper use, always consult instructions accompanying product.

Walker 1/2, 3/4, 1 and 2 Ton Capacity Cranes

These shop cranes are ideal for a variety of automotive, fleet, industrial, farm and airport applications.

- Hydraulic operation and long pump handle provide easy lifting.
- Wide base provides good stability under load.
- Ball bearing swivel base (except for 93806) and removable handle provide flexibility in operation.
- Sensitive release valve provides controlled load lowering.
- Multiple boom length adjustments.
- Large roller bearing front wheels and full swivel ball bearing rear casters provide easy maneuvering.
- 93806 and 93809 come with grab hook. 93812 and 93815 come with slip hook.

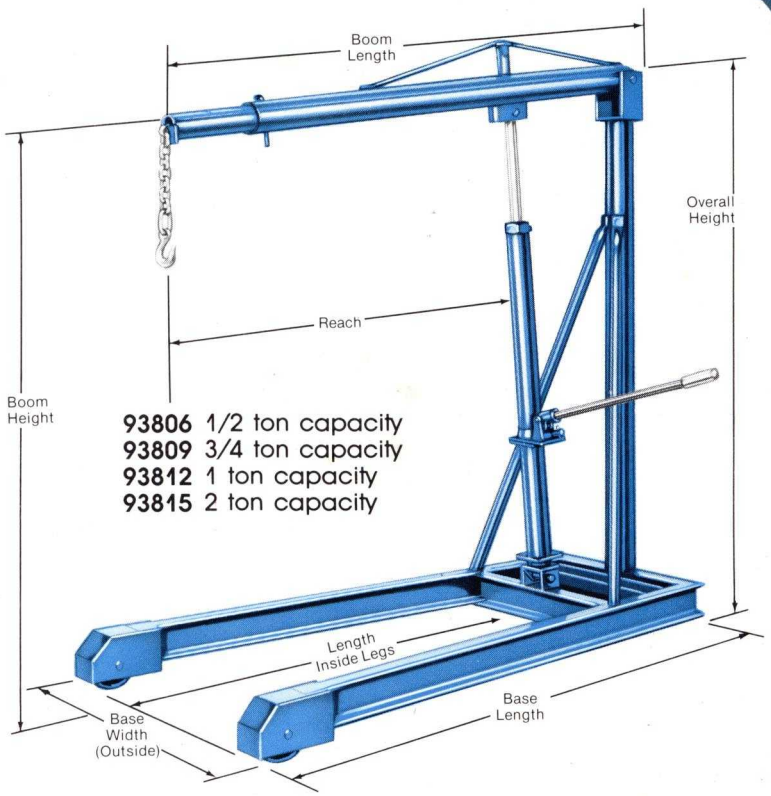

Optional Accessories

93270
93271

Sling adapters

93263
93265
93266

Swivel hooks

93255

93256

93255 Five foot chain with slip and grab hook. Shipping wt. - 4 lbs.
93256 Barrel hooks. Chain spreads 52 inches with eye bracket. Shipping wt.-6 lbs.

Sling Adapters						
PART NO.	Capacity (lbs.)	Chain Length	Chain Size	Lifting Eye Opening	Gear Ratio	Shipping Weight
93270	2000	52″	1/4″	1 1/4″ Dia.	34 to 1	10 lbs.
93271	4000	60″	5/16″	1 3/4″ Dia.	82 to 1	23 lbs.

Swivel Hooks				
PART NO.	Fits Crane No.	Capacity (lbs.)	Length	Shipping Weight
93263	93806 93809	1500	14 1/2″	2 lbs.
93265	93812	2000	14 1/2″	3 lbs.
93266	93815	4000	18 1/8″	6 lbs.

PART NO.	Capacity (ton)	Boom Position	Capacity (lbs.)	Boom Height Max.	Boom Height Min.	Boom Length	Reach	Overall Height	Base Width (front)	Base Length	Length Inside Legs	Front Wheel Dia.	Caster Wheel Dia.	Chain Size	Shipping Wt. (lbs.)
93806	1/2 ton	#1	1000	94″	26″	41 1/2″	30″	62″	29 3/8″	54 3/4″	42 3/4″	6″	4″	5/16″	198
		#2	600	98″	22 1/2″	46″	35″								
		#3	300	108″	14 1/2″	57″	46″								
		#4	200	116″	8″	66″	55″								
93809	3/4 ton	#1	1500	108″	28″	52 3/4″	39″	68 1/4″	31 7/8″	66 1/2″	51 5/8″	6″	4″	5/16″	264
		#2	1000	111″	26″	56 1/4″	43″								
		#3	500	120″	19 1/2″	67 3/4″	54″								
		#4	300	132″	10″	81″	68″								
93812	1 ton	#1	2000	108″	32 1/2″	59 1/2″	40″	78″	35 3/4″	72″	54 1/4″	6″	4″	3/8″	366
		#2	1500	109″	31″	61 3/4″	43″								
		#3	1000	113″	27 1/2″	67 1/2″	49″								
		#4	600	120″	20″	80″	62″								
		#5	400	129″	9″	95″	77″								
93815	2 ton	#1	4000	131″	52″	66″	46″	83″	46 1/2″	88 1/2″	67 1/2″	8″	6″	1/2″	577
		#2	3000	136″	49 1/2″	72″	52″								
		#3	2000	141″	47″	78″	58″								
		#4	1500	143 1/2″	45 1/2″	81 1/2″	61″								
		#5	1000	152″	41″	92″	72″								

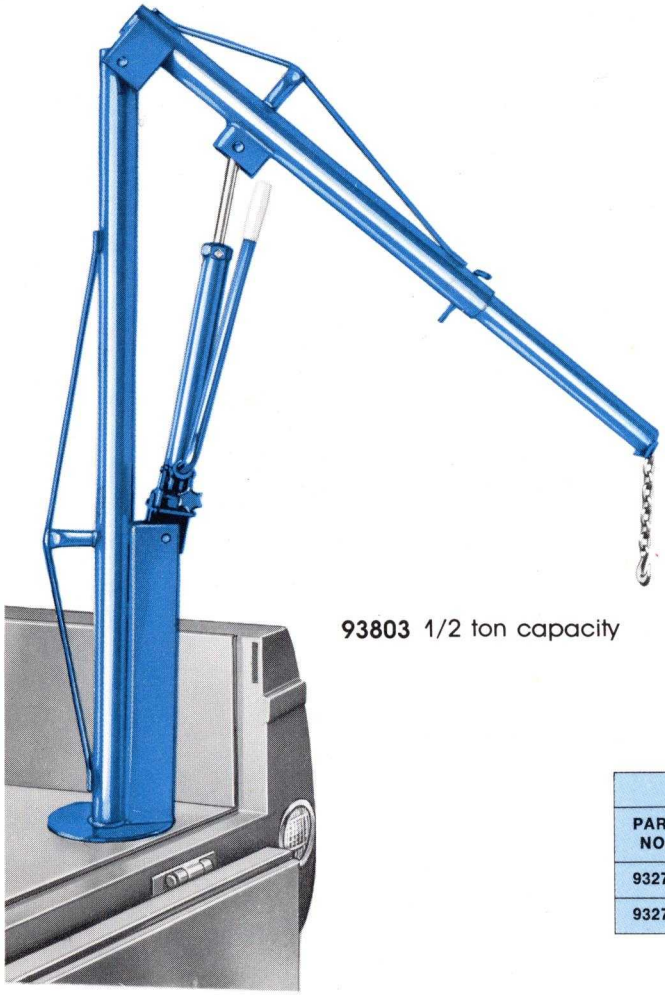

93803 1/2 ton capacity

93803 1/2 Ton Capacity Truck Mounted Crane

This specialized crane will easily raise or lower heavy, bulky items. Ideal for a wide variety of automotive, fleet, industrial, farm and airport applications.

- Hydraulic operation and special handle design provide easy lifting.
- Sensitive hand controlled release for lowering load.
- Telescoping boom.
- Includes the 93454 mounting well.

Optional Accessories

Sling adapters

Sling Adapters						
PART NO.	Capacity (lbs.)	Chain Length	Chain Size	Lifting Eye Opening	Gear Ratio	Shipping Weight
93270	2000	52″	¼″	1¼″ Dia.	34 to 1	10 lbs.
93271	4000	60″	5/16″	1¾″ Dia.	82 to 1	23 lbs.

93255

93256

93270
93271

93255 Five foot chain with slip and grab hook. Shipping wt. — 4 lbs.

93256 Barrel hooks. Chain spreads 52 inches with eye bracket. Shipping wt. — 6 lbs.

93454 Extra mounting well. (One is included with 93803 crane). Shipping wt. — 18 lbs.

Swivel hook

Swivel Hook			
PART NO.	Capacity (lbs.)	Length	Shipping Weight
93263	1500	14½″	2 lbs.

93263

93454

PART NO.	Capacity	Boom Position	Capacity (lbs.)	Boom Height Max.	Boom Height Min.	Boom Length	Reach	Overall Height	Chain Size	Shipping Wt. (lbs.)
93803	½ ton	#1 #2 #3	1000 800 600	81½″ 84″ 90″	22″ 17½″ 6½″	37½″ 42″ 53″	26½″ 31″ 42″	72″	5/16″	123

3/4 Ton Capacity and 1-1/4 Ton Capacity Wheel Dollies

Designed for easy removal, installation and handling of dual wheels and large single wheels.

- Handles wheels and tires up to 52" in diameter.
- Hydraulic lifting power for easy operation. Carriage guides on four rollers for smooth vertical lifting.

93225 1-1/2 ton capacity portable hydraulic jack is included with wheel dollies. Jack can be removed for other jobs.

- Carriage arm rollers (with self-lubricating bearings) allow tire rotation for easy lug alignment.
- Load levelers (on 93765 only) aid proper alignment...and reduce the risk of smashed bearings and grease seals.
- Wide frame and lifting carriage for stability.
- Full swivel ball bearing casters for easy maneuvering.
- Built-in tool and parts tray.

93765
3/4 ton capacity

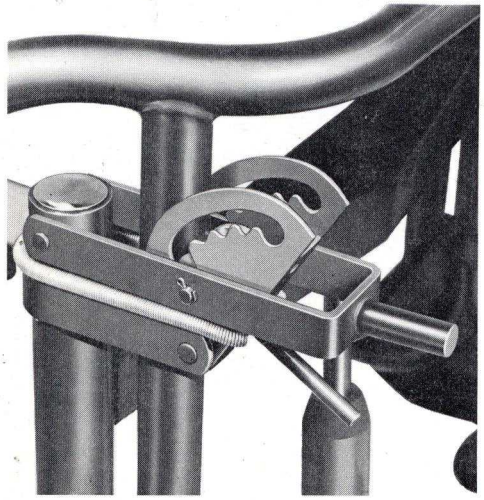

Load levelers on **93765**

93766
1-1/4 ton capacity

PART NO.	Capacity (lbs.)	Lift Range	Length of Lifting Arms	Spread of Lifting Arms	Overall Length	Overall Width	Overall Height	Caster Wheel Diameter	Shipping Weight (lbs.)
93765	1500	0-7⅞"	23"	24"	33⅝"	35"	31"	3"	119
93766	2500	0-7⅞"	23"	24"	33⅝"	35"	31"	3"	158

 For safe and proper use, always consult instructions accompanying product.

93279
In position for bumpers.

93279
In position for doors.

93279 Door and bumper handler

Here's a Walker service jack attachment designed specifically for car dealers and body shops. It fits and holds all doors, bumpers and station wagon tailgates. Attach it to a floor service jack (1-1/2 ton or larger) and use it for installing or removing any of these large, heavy, body parts.

- Fits all energy absorbing bumpers (including those with bumper guards), conventional bumpers and "V" bumpers.
- Fits all car doors and tailgates, too.
- Adjustable arms spread wide (30") for maximum stability for car doors, tailgates and bumpers. Arms may be retracted to clear bumper guards.
- With the door and bumper handler, one man can easily install or remove doors, bumpers or tailgates. Large "T" handle lock secures the door and bumper handler to a 1-1/2 ton or larger floor service jack in seconds.
- Grips doors, tailgates and bumpers firmly with padded individually adjustable chains. Fine adjustments are provided on the extra-long, door-carrying handle tube and on the column.
- Padded carriage arms, hooks and chains prevent damage to tender areas of expensive doors, bumpers and tailgates.
- Large square steel tubing used for carriage and column provides extra strength and rigidity.
- Shipping weight – 33 lbs.

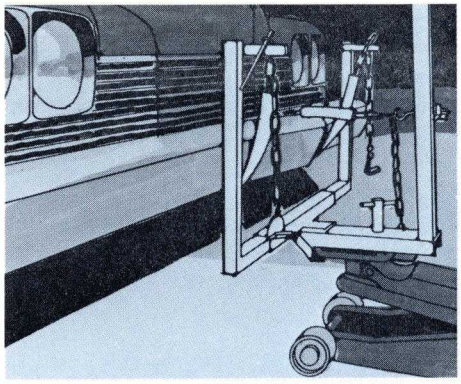

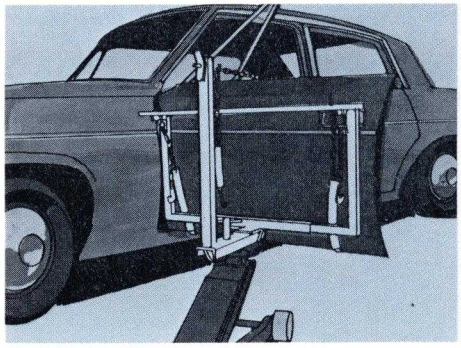

Portable Hydraulic Jacks

1-1/2, 3, 5, 8, and 12 Ton Capacity Portable Hydraulic Jacks

For construction, industrial, agricultural and automotive jobs...for lifting, pushing, bending and straightening.

- Extra strong ribbed base. Bullet-shaped tank distributes load evenly.
- Hydraulic bypass circuit prevents ram over-travel.
- Pump and ram are centered for good balance and easy handling.
- Jacks can be operated horizontally.
- The bases of these jacks are pre-tapped to accept pressure gauges.
- Handle included with each jack.

93238 1-1/2 Ton Capacity High-Lift Hydraulic Jack

A multi-purpose jack designed for lifting, pushing, pulling, stretching and straightening.

- Long, flexible chain with hook conforms to bumper contours.
- Ideal for many farm uses.
- For best pickup height, chain adjusts from 2-1/4" to 17-1/4".
- Long handle reduces pumping effort.
- Hydraulic bypass circuit prevents over-travel.

93239 1-1/2 Ton Capacity High-Lift Hydraulic Jack

A versatile jack for pushing, bending and straightening jobs in farm or industrial applications.

- Knurled end in ram can easily be pressed into your cap or adapter.
- Long handle reduces pumping effort.
- Operates in a vertical or horizontal position.

After raising the vehicle, ALWAYS support it with jack stands before getting under it for any reason. These jacks are designed for lifting purposes only...not for supporting loads.

PART NO.	Capacity (lbs.)	Height (Closed)	Extension Screw	Maximum Height	Power Raise	Ram Diameter	Effective Ram Area (Sq. In.)	Base Size	Handle Length	Shipping Weight (lbs.)	Handle No.
93225	3000	7¼"	2⅛"	14½"	5⅛"	⅞"	.69	3" x 5¾"	17"	9	228637
93226	6000	8½"	3½"	18"	6"	1⅛"	1.11	3½" x 6¼"	20½"	14	10667
93227	10,000	9"	4"	19¼"	6¼"	1⅜"	1.63	4¼" x 6⅝"	20½"	18	10667
93228	16,000	9"	4¼"	19½"	6¼"	1½"	1.84	4½" x 6⅞"	20½"	21	10667
93229	24,000	9"	3¼"	17¾"	5½"	1¾"	2.59	4¾" x 7½"	20½"	26	10667
93238	3000	22½" *	—	39¾"	17¼" *	15/16"	.69	3" x 5¾"	17"	18	10656
93239	3000	21½"	—	38¾"	17¼"	15/16"	.69	3" x 5¾"	17"	16	10656

*Lifting Ranges: Hook — low, 2¼"-19½"; high, 17¼"-34½". Top of ram: 22½"-39¾".

 For safe and proper use, always consult instructions accompanying product.

WALKER®

20, 30, 50, and 100 Ton Capacity Heavy Duty Portable Hydraulic Jacks

93233
20 ton capacity

93601
30 ton capacity

93602
50 ton capacity

93603
100 ton capacity

93233 20 Ton Capacity Portable Hydraulic Jack

Designed for use on large industrial and heavy equipment applications.

- Positive load control with concentrically grooved lifting cap.
- Can be operated in horizontal position.
- Solid machined steel base is tapped to accept 93262 hydraulic pressure gauge ...ideal for work requiring accurate pressure readings.
- Countersunk release valve prevents damage or accidental load release.
- Handle included.

30, 50 and 100 Ton Capacity Portable Hydraulic Jacks

- Automatic relief valve provides overload protection.
- Dual release valves operate from either side.
- Self-leveling cap.
- Two speed pump...speed to contact load, power to lift it.

After raising the vehicle, ALWAYS support it with jack stands before getting under it for any reason. These jacks are designed for lifting purposes only...not for supporting loads.

PART NO.	Capacity (lbs.)	Height (Closed)	Power Raise	Maximum Height	Effective Ram Area (Sq. In.)	Ram Diameter	Base Size	Handle Length	Shipping Weight (lbs.)	Handle No.
93233	40,000	10¾″	7¾″	18½″	4.21	2¼″	5½″ x 7″	20½″	46	10667
93601	60,000	11″	6¾″	17¾″	7.07	2½″	8½″ x 6″	20″	77	2724
93602	100,000	12″	7″	19″	11.04	3⅜″	10″ x 7½″	20″	126	2724
93603	200,000	12″	6⅛″	18⅛″	19.63	4¼″	12″ x 9½″	20″	232	2724

Jack Stands

2, 2-1/2, 3, 5 and 7 Ton Capacity Jack Stands

Walker jack stands are a must for every maintenance and repair shop...and everywhere lifting equipment is used. Jack stands are designed for use in pairs!

93505 2 ton capacity jack stands
93516 5 ton capacity jack stands
93519 7 ton capacity jack stands

- Large bases with sure-grip corners.
- Strong, rigid, pressed steel frame construction.
- Convenient release and carrying handle.
- Sturdy rack bar for positive contact and support.
- For load support, the holding dog engages teeth in rack bar.

93506 3 ton capacity low-height jack stands
93510 3 ton capacity high-height jack stands

- Ribbed square base for firm support... even on soft surfaces.
- Heavy gauge steel construction.
- Large support caps.
- Support pin attached with a chain.

93513 2-1/2 ton capacity rocker jack stands

- Specially designed for use with end lifts. The cap tilts as vehicle is raised or lowered.
- Support pins for height adjustment are chained to stands.
- Extra large base provides firm support... even on soft surfaces.

93504 2 ton capacity fixed height jack stands

- Heavy gauge steel construction.
- Ribbed square base offers firm support.

93450 Heavy Duty Wheel Chocks

According to OSHA standards, all loading dock facilities must have truck wheel chocks available. Walker wheel chocks comply with OSHA recommendations.

- Rugged, all-steel construction.
- 6" x 10" base plate is lug-patterned for sure gripping.
- Each chock comes with a 15 ft. chain and J-shaped wall mounting bracket. One end of the chain can be fastened to the hanging bracket. Chock can be attached to other end of the chain. This assures convenient storage and protection from loss.
- Shipping wt. — 31 lbs. per pair.

93505
2 ton capacity

93516
5 ton capacity

93506
3 ton capacity

93519
7 ton capacity

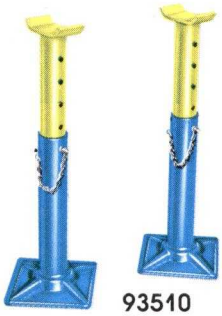

93510
3 ton capacity

93513
2-1/2 ton capacity

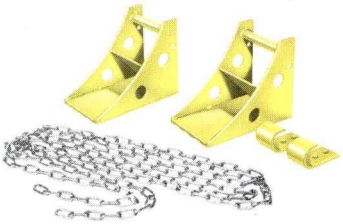

93450
heavy duty wheel chocks

93504
2 ton capacity

JACK STANDS ARE DESIGNED FOR USE IN PAIRS.

PART NO.	Capacity ea. (lbs.)	Low Height (w/o pins)	High Height	Height Intervals	Base Size	Cap Size	Shipping Weight (lbs.)
93504	4,000 ea.	Fixed height @ 16½"			7" x 7"	2½" x 4½"	16 pr.
93505	4,000 ea.	11"	17¾"	⅝"	7" x 9¼"	1" x 5"	19 pr.
93506	6,000 ea.	12¼"	20"	1⅞"	7" x 7"	2½" x 4½"	18 pr.
93510	6,000 ea.	14"	24"	1⅞"	7" x 7"	2½" x 4½"	20 pr.
93513	5,000 ea.	16"	24⅜"	1⅞"	12" dia.	4" x 6"	34 pr.
93516	10,000 ea.	14⅝"	24⅞"	¾"	10" x 12½"	1⅜" x 5⅞"	34 pr.
93519	14,000 ea.	20"	30⅜"	¾"	12⅞" x 15⅛"	1⅜" x 5⅞"	48 pr.

WALKER®

93779
3/4 ton capacity

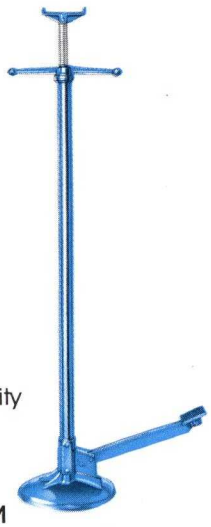

93781
3/4 ton capacity

93780
25 ton capacity

93784
1-1/2 ton capacity

93779 3/4 Ton Capacity Under Hoist Stand
93781 3/4 Ton Capacity Under Hoist Rocking Stand

These Walker stands are extremely helpful under the hoist. Their slim-line design affords maximum work space under the hoist and easy storage.

- Stands can be used to spread springs, free frozen shackles, and unload ball joints for lubrication. Use them for exhaust system and shock absorber replacement as well as other under-hoist activities.
- Acme screw for precise height adjustment...from 54-1/4" to 80-1/2" (26-1/4" of precision adjustment).

93781 features a convenient folding foot pedal. 50 lbs. force on the pedal exerts 400 lbs. at the cap.

93525
10 ton capacity

93780 25 Ton Capacity Trailer Stabilizing Jack Stand

A practical necessity for warehouses, freight shippers, machinery movers and erectors, industrial suppliers, fleets and construction firms.

- This jack stand will stabilize and support a trailer during loading and unloading... whether or not the tractor is attached.
- Solid steel saddle (4" x 4").
- Large, reinforced base plate offers firm support and stability.
- Jack is balanced at handle for easy carrying.
- Plated saddle, screw and release handle resist corrosion.

93522
10 ton capacity

93522 10 Ton Capacity Low-Height Jack Stands
93525 10 Ton Capacity High-Height Jack Stands

- Rugged tubular steel construction.
- Large 16" square four legged base for stability and support.

93784 1-1/2 Ton Capacity High-Height Jack Stand

- Welded tubular steel construction for strength.
- Large 24" tripod base for stability.
- Lifting cap will hold 1-1/2 ton capacity portable hydraulic jack for special applications.

JACK STANDS ARE DESIGNED FOR USE IN PAIRS.

PART NO.	Capacity ea. (lbs.)	Low Height (w/o pins)	High Height	Height Intervals	Base Size	Cap Size	Shipping Weight (lbs.)
93522	20,000 ea.	18⅛"	30"	1½"	16" x 16"	5" x 5"	72 pr.
93525	20,000 ea.	27½"	46"	2"	16" x 16"	5" x 5"	98 pr.
93779	1,500 ea.	54¼"	80½"	Screw Range 26¼"	12" dia.	4½" x 1¼"	30 ea.
93780	50,000 ea.	44⅝"	51"	Screw Range 6⅜"	14" x 14"	4" x 4"	55 ea.
93781	1,500 ea.	54¼"	80½"	Screw Range 26¼"	12" dia.	4½" x 1¼"	39ea.
93784	3,000 ea.	57¼"*	81¼"*	3"	24" x 24"	5" x 5"	42 ea.

*With the 93225 jack, low height is 64½", high height is 95¾".

WALKER®

Passenger Car and Light Truck Jacks

93471 3/4 Ton Capacity High Lift Scissors Jack

Designed for compact and sports car lifting.

- Ideal for frame or structural member lifts.
- Handle doubles as a lug wrench and hub cap remover.

93471
3/4 ton capacity

93472
1-1/2 ton capacity

93472 1-1/2 Ton Capacity Scissors Jack

- Riveted steel link design for a stable, straight line raise.
- Acme screw mounted in enclosed ball thrust bearing for easy lifting.
- Long handle (49-3/4") provides reach for under-axle lifting.

93479
3/4 ton capacity

93489
3/4 ton capacity

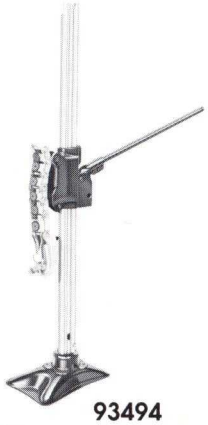

93494
1-1/4 ton capacity

93479 3/4 Ton Capacity Tripod Bumper Jack

- Tripod design provides firm support on flat or uneven ground.
- U-channel protects Acme screw.
- Acme screw mounted on ball bearing for easier handle effort.
- Handle and legs fold for compact storage.

After raising the vehicle, ALWAYS support it with jack stands before getting under it for any reason. These jacks are designed for lifting purposes only...not for supporting loads.

93489 3/4 Ton Capacity Ratchet Bumper Jack

- A well constructed jack with a reliable, single action ratchet mechanism.

93494 1-1/4 Ton Capacity Ratchet Bumper Jack

- Patented 7-position, spring-loaded flex chain fits most bumper shapes.
- Auxiliary hook swings out for slotted bumpers.
- Rubber pads protect bumpers.

93495 1 Ton Capacity Bipod Bumper Jack

- Flexible chain conforms to most bumper shapes. Chain adjusts to various positions for a wider lifting range.
- Legs lock in place under load with spreader bar.
- Acme screw is mounted on ball bearing so it turns easily.
- Auxiliary hook fits slotted bumpers.
- Polyvinyl coated saddle protects bumpers.

93495
1 ton capacity

93496 1 Ton Capacity Ratchet Bumper Jack

Designed to reach under the larger bumpers of newer cars.

- Flexible links conform to bumper shapes.
- Chain adjusts to six different positions for greater lifting range.
- Polyvinyl coated hook and links protect bumpers.

PART NO.	Capacity (lbs.)	Application	Lifting Range		Maximum Power Raise	Base Size	Handle	Shipping Weight (lbs.)
			Low Pickup Height	High Lift Point				
93471	1500	Scissors Screw	4"	13"	9"	4" x 6½"	11½"	9
93472	3000	Scissors Screw	4¾"	14¼"	9½"	4" x 6"	49¾"	12
93479	1500	Tripod Screw	1½"* 1½"**	22½"* 26½"**	25"	16½" Sides	10" Folding	17
93489	1500	Ratchet	1"* 6¼"**	25"* 30¼"**	24"	6⅜" x 8⅜"	18"	10
93494	2500	Ratchet	1"* 5½"**	28½"* 33"**	27½"	6" x 8"	13⅝"	14
93495	2000	Bipod Screw	1¼"* 3"**	23½"* 33¼"**	30¼"	12" x 21½" Open	10" Folding	25
93496	2000	Ratchet	1½"* 2¼"**	17¾"* 29½"**	27¼"	6" x 8"	18"	13

*Lowest position of load member. **Highest position of load member.

93496
1 ton capacity

Adapters & Accessories

WALKER®

For Service Jacks

93269 V-block adapter used on 93729, 93730 and 93731 for lifting on axles and other curved surfaces. Shipping wt. - 6 lbs.

For End Lifts

93241 6" lifting fingers (pair) for 93249 and 93268. Standard on new end lifts, available for older models. Shipping wt. - 3 lbs. pr.

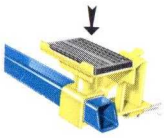

93249 4-position lifting saddles (pair) for 93686.
93268 4-position lifting saddles (pair) for 93688, 93689, 93690, and 93691. Standard with new end lifts. Shipping wt. - 25 lbs. pr.

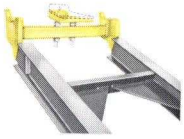

93264 front end frame adapter for 93827. Shipping wt. - 16 lbs.

93795 high lift adapter for 93688 and 93690. Shipping wt. - 15 lbs.

For Transmission Jacks

93246 adapter for 1962 and earlier Power Glide transmissions for 93711, 93714 and 93716. Shipping wt. - 6 lbs.

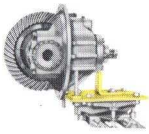

93250 differential adapter for 93715 and 93717. Shipping wt. - 28 lbs.

93251 Allison automatic transmission adapter for 93715 and 93717. Shipping wt. - 10 lbs.

93258 Toronado and El Dorado transaxle adapter for 93711, 93714 and 93716. Shipping wt. - 5 lbs.

For Presses

93247 bearing safety shield for 93615, 93616 and 93618. Shipping wt. - 1 lb.

93242 arbor plates for 93616. (One set included with press.) Shipping wt. - 12 lbs.
93243 arbor plates for 93618. (One set included with press.) Shipping wt. - 26 lbs.

93240 bearing separator for 93615 press. Shipping wt. - 5 lbs.
93254 bearing separator for 93616 press. Shipping wt. - 12 lbs.
93275 bearing separator for 93618 press. Shipping wt. - 19 lbs.

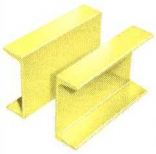

93244 bearing separator support set for 93616 and 93618. Shipping wt. - 12 lbs.

93617 press bed for 93616. Shipping wt. - 36 lbs.
93619 press bed for 93618. Shipping wt. - 57 lbs.

93259 hydraulic pressure gauge and connector for 93230 and 93229. Shipping wt. - 2 lbs.

93262 hydraulic pressure gauge and connector for 93234 and 93233. Shipping wt. - 2 lbs.

93260 short ram for 93616. Shipping wt. - 1 lb.

For Engine Stands

93282 transmission head for 93774. Shipping wt. - 10 lbs.

93283 outboard motor head for 93770 and 93774. Shipping wt. - 24 lbs.

93284 VW adapter for 93770 and 93774. Shipping wt. - .5 lb.

For Cranes

93255 five ft. chain with slip and grab hook for 93803, 93806, 93809, 93812 and 93815. Shipping wt. - 4 lbs.

93256 barrel hooks for 93803, 93806, 93809, 93812 and 93815. Shipping wt. - 6 lbs.

93263 swivel hook for 93803, 93806, and 93809. Shipping wt. - 2 lbs.
93265 swivel hook for 93812. Shipping wt. - 3 lbs.
93266 swivel hook for 93815. Shipping wt. - 6 lbs.

93270 sling adapter (1 ton cap.) for 93803, 93806, 93809 and 93812. Shipping wt. - 10 lbs.
93271 sling adapter (2 ton cap.) for 93815. Shipping wt. - 23 lbs.

93454 mounting well for 93803. (One is included with 93803.) Shipping wt. - 18 lbs.

Hydraulic Jack Oil

93291 1 quart
93292 1 gallon
93293 5 gallons

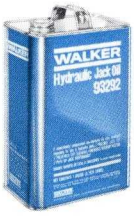

- Inhibits interior rusting and preserves leather cups.
- Prolongs jack life and peps up jack performance.
- Contains anti-foaming agents and anti-sludge ingredients.
- Flows at 50 degrees F below zero.

WALKER®

Body-Jak™ Portable Hydraulic Power Equipment

Hydraulic Body-Jak™ Units

Walker 4 Ton and 10 Ton Remote Control Hydraulic Body-Jak™ units are easy to operate. Units are compact yet powerful and include pump, ram, connecting hose and quick coupler.

Features include:

- Quick-detachable hose couplers.
- Positive ram travel stop.
- Overload protection valve in pump.
- Easy-to-maintain displacement type hand pump.
- Long-life, wear-resistant polyurethane ram cup.
- Spring retraction ram.

PART NO.	Capacity (Tons)	Closed Ram Height	Extend. Ram Height	Ram Stroke	Pump No.	Ram No.	Complete Quick Coupler	Hose No.	Shpg. Weight (lbs.)
93531	4	10⅝″	15⅞″	5¼″	93101	93107	93140	93141	16
93535	10	12⅛″	18⅛″	6″	93102	93111	93185	93186	29

Body-Jak™ Pumps

Both 93101 (4 ton) and 93102 (10 ton) Walker Body-Jak™ pumps feature:

- Leak-proof gaskets.
- Overload protective valve.
- Tough, high quality, malleable castings.
- Straight-line gravity seating valve design.
- Operates in any position.
- Comfortable non-slip rubber gripped pump handles.

93101 4 ton pump

93102 10 ton pump

PART NO.	P.S.I.	Overall Length	Handle Length	Oil Cap. Cu. In.	Piston Dia.	Pump Stroke	Hose Conn.	Shpg. Weight (lbs.)
93101	7,000	14¾″	14″	20	7/16″	⅝″	¼″	8
93102	10,000	20″	19″	55	7/16″	⅞″	⅜″	15

Body-Jak™ Rams

Specially constructed seamless steel tubing gives ram cylinders a smoother, harder, finished inside diameter. Polyurethane ram cups resist wear, are impervious to oil, water and other fluids and have inherent recovery properties. Stops prevent excessive ram travel. All rams include ram-half quick coupler and caps.

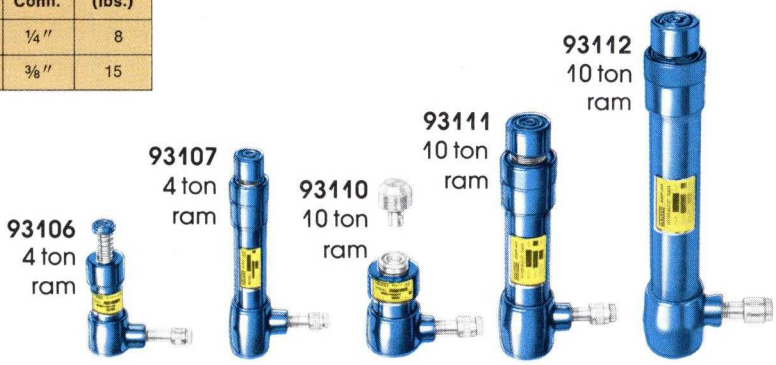

PART NO.	Capacity (Tons)	Closed Height	Extended Height	Ram Stroke	Effective Ram Area (sq. in.)	Outside Diameter	Shpg. Weight (lbs.)
93106	4	4 15/16″	*9⅜″	2 11/16″	1.227	2″	3
93107	4	10⅝″	15⅞″	5¼″	1.227	1⅞″	6
93110	**10	4¾″	7¼″	2½″	2.405	2⅝″	7
93111	10	12⅛″	18⅛″	6″	2.405	2½″	12
93112	10	16 5/16″	26 5/16″	10″	2.405	2½″	14

*Includes 1¾″ extension screw. **Threaded attachment included.

Couplings and Hoses

93138
4 Ton Ram-half Quick Coupler

93139
4 Ton Hose-half Quick Coupler

93140
Complete 4 Ton Quick Coupler

93183
10 Ton Ram-half Quick Coupler

93184
10 Ton Hose-half Quick Coupler

93185
Complete 10 Ton Quick Coupler

93141
6' Hose for 4 ton units
Shipping weight 2-1/2 lbs.

93186
6' Hose for 10 ton units
Shipping weight 2-1/2 lbs.

 For safe and proper use, always consult instructions accompanying product.

Body-Jak™ Portable Hydraulic Power Equipment

WALKER®

93530 4 Ton Starter Kit

This Walker 4 ton starter kit includes the 93531 4 ton Body-Jak™ unit and 20 attachments. It contains the basic parts needed for pushing, bending and straightening. Additional attachments may be added as the need arises. Shipping weight – 33 lbs.

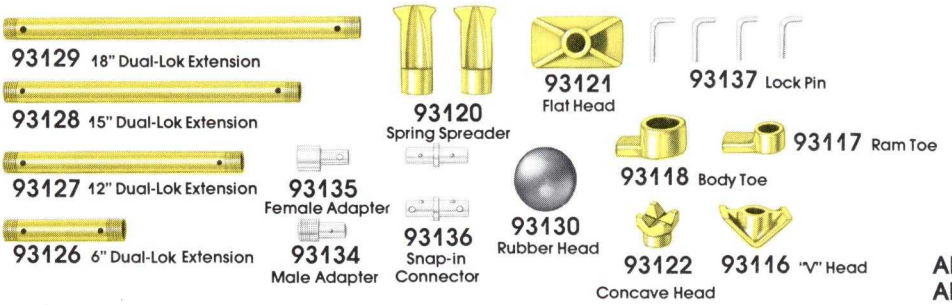

ALL ATTACHMENTS ARE AVAILABLE INDIVIDUALLY.

93533 4 Ton Deluxe Kit

This 4 ton Deluxe Kit includes the 93531 4 ton Body-Jak™ unit and 31 attachments. It contains an assortment of Dual-Lok extensions and all the right equipment for pushing, spreading, bending, straightening and clamping.

Shop-proven and professional, the 4 ton Deluxe Kit is ideal for all automotive repair shops, service stations, garages and specialty shops. Shipping weight – 56 lbs.

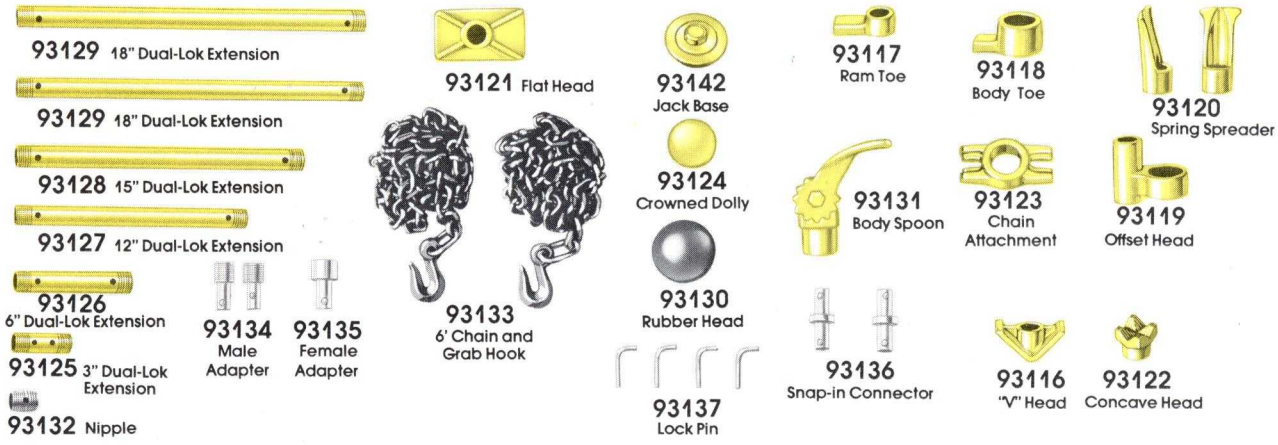

ALL ATTACHMENTS ARE AVAILABLE INDIVIDUALLY.

Body-Jak™ Portable Hydraulic Power Equipment

93534 10 Ton Starter Kit

This 10 ton starter kit provides the basic parts for handling many types of heavy duty jobs. Additional attachments may be added as required. Shipping weight - 67 lbs.

Kit features:

- Heavy duty 93535 10 ton Body-Jak™ unit.
- 18 heavy duty attachments.
- Heavy duty Dual-Lok Extensions snap together quickly and easily.

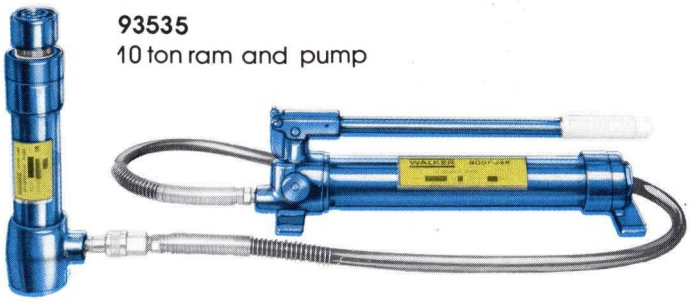

93535
10 ton ram and pump

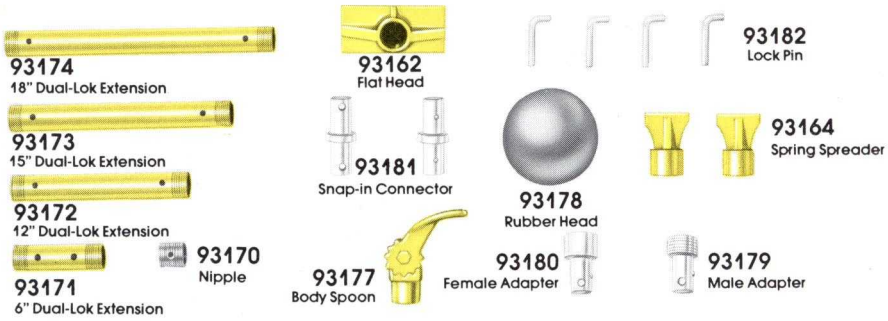

ALL ATTACHMENTS ARE AVAILABLE INDIVIDUALLY.

93537 10 Ton Deluxe Kit

This 10 ton Deluxe Kit provides the heavy duty capability for a wide variety of jobs ranging from auto and truck body and frame repair to heavy industrial work. Shipping weight - 113 lbs.

Kit features:

- Powerful heavy duty 93535 10 ton Body-Jak™ unit.
- Deluxe set of 32 attachments.
- Heavy duty Dual-Lok Extensions snap together and disassemble quickly.

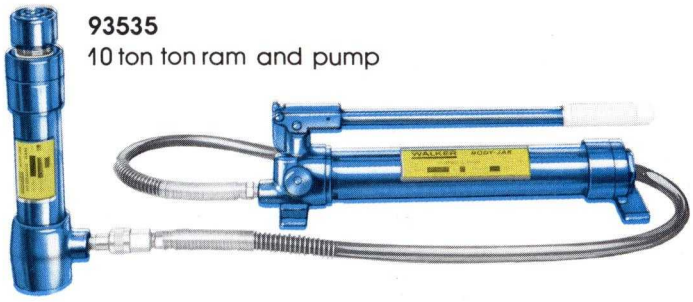

93535
10 ton ton ram and pump

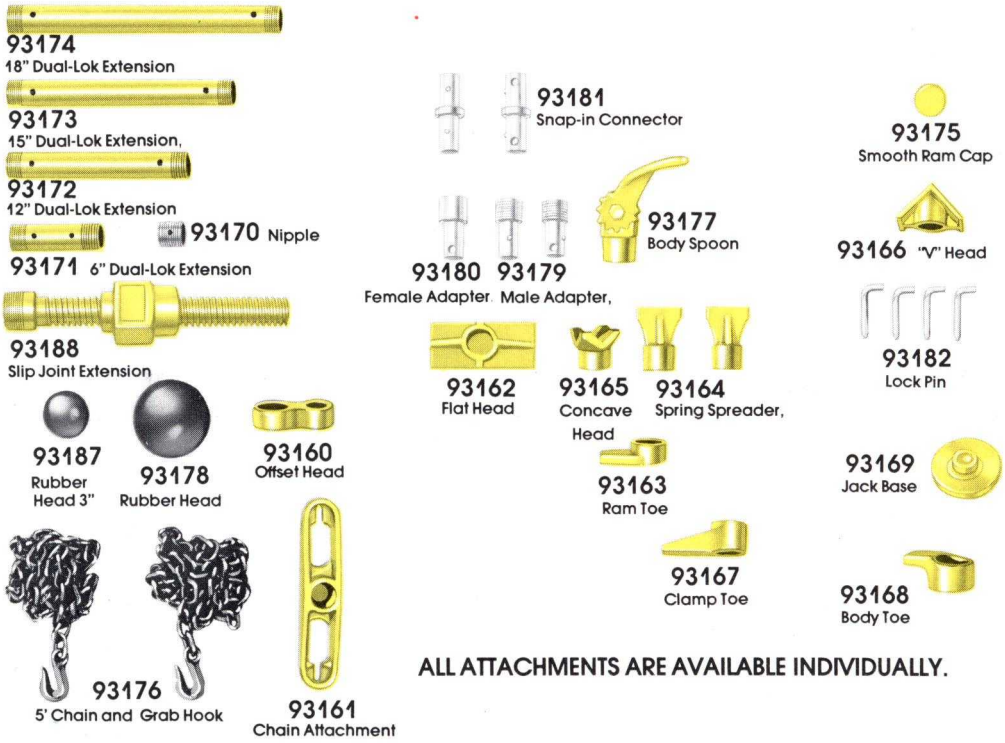

ALL ATTACHMENTS ARE AVAILABLE INDIVIDUALLY.

 For safe and proper use, always consult instructions accompanying product.

Body-Jak™ Portable Hydraulic Power Equipment

WALKER®

93532
4 ton rescue kit

93532 4 Ton Rescue Kit

No Police Department, Rescue Unit, Fire Department or Wrecker Service is completely equipped without this Walker 4 ton rescue kit.

In addition to the 4 ton pump, spreader, ram, hose and quick coupler, the kit contains 30 attachments packed conveniently in a heavy gauge steel tool chest. It includes the necessary tools for most types of rescue work involved with fires, accidents and other emergencies. Shipping weight - 80 lbs.

93532 4 ton rescue kit contains:

- **93531** 4 ton Body-Jak™ unit (pump, ram, hose and coupler)
- **93542** 4 ton steel tool chest
- **93108** hydraulic spreader with ram half coupler
- **93116** "V" head
- **93117** ram toe
- **93118** body toe
- **93119** offset head
- **93120** (2) spring spreader
- **93121** flat head
- **93122** concave head
- **93123** chain attachment
- **93124** crowned dolly
- **93125** 3" Dual-Lok Extension
- **93126** 6" Dual-Lok Extension
- **93127** 12" Dual-Lok Extension
- **93128** 15" Dual-Lok Extension
- **93129** (2) 18" Dual-Lok Extension
- **93130** rubber head
- **93132** nipple
- **93133** (2) chain & hook
- **93134** (2) male adapters
- **93135** female adapter
- **93136** (2) snap-in connectors
- **93137** (4) lock pin
- **93142** jack base

93536
10 ton rescue kit

93536 10 Ton Rescue Kit

This Walker rescue kit contains the appropriate parts for heavy duty emergency and repair work. It's ideal for fleet operated maintenance repair shops, heavy duty wrecker service, municipal garage operations, truck stops and fleet repair specialists.

The 93536 kit contains a 10 ton pump, 10 ton ram, 1 ton spreader, hose, quick coupler, and 31 heavy duty attachments packed in a heavy gauge steel tool chest. Shipping weight - 142 lbs.

93536 10 ton rescue kit contains:

- **93535** 10 ton Body-Jak™ unit (pump, ram, hose and coupler)
- **93543** 10 ton steel tool chest
- **93108** 1 ton hydraulic spreader with ram half coupler
- **93160** offset head
- **93161** chain attachment
- **93162** flat head
- **93163** ram toe
- **93164** (2) spring spreader
- **93165** concave head
- **93166** "V" head
- **93167** clamp toe
- **93168** body toe
- **93169** jack base
- **93170** nipple
- **93171** 6" Dual-Lok Extension
- **93172** 12" Dual-Lok Extension
- **93173** 15" Dual-Lok Extension
- **93174** 18" Dual-Lok Extension
- **93175** smooth ram cap
- **93176** (2) chain & hook
- **93178** 5" rubber head
- **93179** (2) male adapter
- **93180** female adapter
- **93181** (2) snap-in connector
- **93182** (4) lock pin
- **93187** 3" rubber head
- **93188** slip joint extension

ALL ATTACHMENTS FOR THESE RESCUE KITS ARE AVAILABLE INDIVIDUALLY.

Body-Jak® Portable Hydraulic Power Equipment

Air Operated Hydraulic Pumps

Walker air operated hydraulic pumps can be readily adapted to a variety of situations and equipment set-ups. They can perform a wide range of functions for industrial repair shops, maintenance shops, machinery movers or erectors, and auto repair shops.

- Walker patented "Speed Pak" eliminates hand pumping...lets air do the work.
- Both pumps provide up to 10,000 psi oil at a delivery rate far exceeding manual pumps.
- Internal relief valve protects hydraulic system components...regardless of air pressure.
- Air hose may be disconnected for other uses.

93103 air operated hydraulic pump

- Hand/foot actuator offers versatility... pumps or releases at the touch of a toe, heel, elbow, etc. Leaves hands free for ram positioning or other work.
- Operates on an air supply of from 40-120 psi.
- Two stage release valve.
- 91.5 cu. in. (51 oz.) reservoir allows use of larger rams.
- Shipping weight – 19 lbs.

93104 air operated hydraulic pump

- Four-foot air hose permits user freedom of movement with pump in a fixed location.
- Convenient carrying handle.
- Sensitive hand-controlled release knob.
- Develops full hydraulic pressure (10,000 psi) with 140 psi air pressure.
- Pump provides long, smooth pump strokes.
- 50 cu. in. (28 oz.) oil reservoir.
- Shipping weight – 26 lbs.

93183
10 ton ram half quick coupler

93186
6' hose for 10 ton components

93184
10 ton hose half quick coupler

93185
Complete 10 ton quick coupler

These accessories for the Air Operated Hydraulic Pumps are available, but not included with the pumps.

SPECIFICATIONS: Air-driven hydraulic pump; 3/8" NPT oil port; 1/4" NPT air port; use with 93186 high pressure 10 ton Body-Jak™ hose & 93184 or 93185 quick coupler. NOTE: Unit comes with oil filled reservoir. Hose, couplings, and air fittings are not included.

To order fittings, see "High Pressure Fittings", page 35.

93103
air operated hydraulic pump

93104
air operated hydraulic pump

Shop application for Body-Jak™ hydraulic pumps.

PERFORMANCE*

Hydraulic Pressure	OIL DELIVERY 93103 @ 100 psi air	OIL DELIVERY 93104 @ 140 psi air
No Load	35 cu. in./min.	35 cu. in./min.
5,000 psi	10 cu. in./min.	15 cu. in./min.
10,000 psi	4 cu. in./min.	5 cu. in./min.

*Performance ratings: to avoid equipment damage and/or bodily injury, always use pump in conjunction with comparably psi rated rams and attachments.

Body-Jak™ Accessories

WALKER®

93542
4 ton steel tool chest

93543
10 ton steel tool chest

93556
steel tool stand

93108
hydraulic spreader

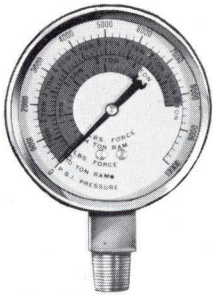

93190
jack gauge

High Pressure Fittings

93193
Reducing Coupling
(3/8 to 1/4)

93195
Coupling
(3/8 - 18)

93198
St. elbow
(3/8 - 18)

93197
90 degree elbow
(3/8 - 18)

93199
Tee
(3/8 - 18)

93200
Cross
(3/8 - 18)

93191
Close Nipple (with hex.)
(3/8 - 18 N.P.T.)

93194
Reducing Bushing
(3/8 to 1/4)

93189
Valve
(3/8 - 18)

93542 4 Ton Steel Tool Chest

- Heavy gauge steel construction.
- Removable top tray.
- Three carrying handles.
- Holds 4 Ton Deluxe kits.
- Included with Walker 93532 4 ton Rescue Kit.
- 24-1/4" long x 9-3/8" wide x 9-5/8" deep.
- Shipping weight – 24 lbs.

93543 10 Ton Steel Tool Chest

- Removable top tray, separated into compartments.
- Heavy gauge steel construction.
- Designed to hold 10 ton Deluxe Kit.
- Included with Walker 93536 10 Ton Rescue Kit.
- 27-1/4" long x 12" wide x 10-1/2" deep.
- Shipping weight – 34 lbs.

93556 Steel Tool Stand

- Rugged all-steel 3 shelf tool stand.
- Large heavy duty casters.
- Easily handles any size Walker Body-Jak™ kit.
- White porcelainized finish.
- 30" long x 13" wide x 32-1/2" high.
- Shipping weight – 52 lbs.

93108 Hydraulic Spreader

- One ton capacity.
- Includes 93194 reducing bushing - enables spreader to be used with either 4 ton OR 10 ton Body-Jak™ pumps.
- Connects directly to pump hose with Quick Couplers.
- Opens to a full 3-3/4" wide.
- Shipping weight – 7-1/2 lbs.

93190 Jack Gauge

- Can be used with either 4 ton or 10 ton Walker Body-Jak™ units.
- 3/8" male pipe thread. N.P.T.
- Rated at 10,000 PSI capacity.
- Shipping weight – 2 lbs.

Numerical Index

New No.	Previous No.	Description	Page No.
93101	——	4 Ton Hydraulic Pump	30
93102	——	10 Ton Hydraulic Pump	30
93103	——	Air Operated Hydraulic Pump	34
93104	——	Air Operated Hydraulic Pump	34
93106	——	4 Ton Short Ram W/Extension Screw	30
93107	——	4 Ton Standard Ram	30
93108	——	1 Ton Hydraulic Spreader	35
93110	——	10 Ton Short Ram W/Threaded Attachment	30
93111	——	10 Ton Standard Ram	30
93112	——	10 Ton Long Ram	30
93116	——	4 Ton "V" Head	31
93117	——	4 Ton Ram Toe	31
93118	——	4 Ton Body Toe	31
93119	——	4 Ton Offset Head	31
93120	——	4 Ton Spring Spreader	31
93121	——	4 Ton Flat Head	31
93122	——	4 Ton Concave Head	31
93123	——	4 Ton Chain Attachment	31
93124	——	4 Ton Crowned Dolly	31
93125	——	4 Ton 3" Tube Extension	31
93126	——	4 Ton 6" Tube Extension	31
93127	——	4 Ton 12" Tube Extension	31
93128	——	4 Ton 15" Tube Extension	31
93129	——	4 Ton 18" Tube Extension	31
93130	——	4 Ton Rubber Head	31
93131	——	4 Ton Body Spoon	31
93132	——	4 Ton Nipple	31
93133	——	4 Ton Chain & Hook	31
93134	——	4 Ton Male Adapter	31
93135	——	4 Ton Female Adapter	31
93136	——	4 Ton Snap-In Connector	31
93137	——	4 Ton Lock Pin	31
93138	——	4 Ton Coupler - Ram Half	30
93139	——	4 Ton Coupler - Hose Half	30
93140	——	4 Ton Coupler - Complete	30
93141	——	4 Ton Hose (6')	30
93142	——	4 Ton Jack Base	31
93160	——	10 Ton Offset Head	32
93161	——	10 Ton Chain Attachment	32
93162	——	10 Ton Flat Head	32
93163	——	10 Ton Ram Toe	32
93164	——	10 Ton Spring Spreader	32
93165	——	10 Ton Concave Head	32
93166	——	10 Ton "V" Head	32
93167	——	10 Ton Clamp Toe	32
93168	——	10 Ton Body Toe	32
93169	——	10 Ton Jack Base	32
93170	——	10 Ton Nipple	32
93171	——	10 Ton 6" Tube Extension	32
93172	——	10 Ton 12" Tube Extension	32
93173	——	10 Ton 15" Tube Extension	32
93174	——	10 Ton 18" Tube Extension	32
93175	——	10 Ton Smooth Ram Cap	32
93176	——	10 Ton Chain & Hook	32
93177	——	10 Ton Body Spoon	32
93178	——	10 Ton 5" Rubber Head	32
93179	——	10 Ton Male Adapter	32
93180	——	10 Ton Female Adapter	32
93181	——	10 Ton Snap-In Connector	32
93182	——	10 Ton Lock Pin	32
93183	——	10 Ton Coupler - Ram Half	30
93184	——	10 Ton Coupler - Hose Half	30
93185	——	10 Ton Coupler - Complete	30
93186	——	10 Ton Hose (6')	30
93187	——	10 Ton 3" Rubber Head	32
93188	——	10 Ton Slip Set Extension	32
93189	——	Valve	35
93190	——	Gauge	35
93191	——	Close Nipple	35
93193	——	Reducing Coupling	35
93194	——	Reducing Bushing	35
93195	——	Coupling	35
93197	——	90 Degree Elbow	35
93198	——	Street Elbow	35
93199	——	Tee	35
93200	——	Cross	35
93225	J-906	1-1/2 Ton Cap. Port. Hyd. Jack	24
93226	J-925	3 Ton Cap. Port. Hyd. Jack	24
93227	J-930	5 Ton Cap. Port. Hyd. Jack	24
93228	J-935	8 Ton Cap. Port. Hyd. Jack	24
93229	J-945	12 Ton Cap. Port. Hyd. Jack	24
93230	——	15 Ton Cap. Shop Press Jack	17
93233	J-953	20 Ton Cap. Port. Hyd. Jack	25
93234	——	25 Ton Cap. Shop Press Jack	18
93238	J-901	1-1/2 Ton Cap. High Lift Portable Hydraulic Jack	24
93239	——	1-1/2 Ton Cap. High Lift Portable Hydraulic Jack	24
93240	——	10 Ton Cap. Bearing Separator	29
93241	——	Slotted Bumper Finger	29
93242	——	15 Ton Cap. Arbor Plates	29
93243	——	25 Ton Cap. Arbor Plates	29
93244	——	Bearing Separator Support Set	29
93246	AD-31	Powerglide Trans. Adapter	29
93247	AD-34	Safety Shield	29
93249	AD-37	Lifting Saddles	29
93250	AD-10	Differential Adapter	29
93251	AD-11	Allison Transmission Adapter	29
93254	——	17 Ton Cap. Bearing Separator	29
93255	AD-20	5' Chain W/Slip & Grab Hook	29
93256	AD-21	Barrel Hook	29
93258	AD-29	Toronado Transmission Adapter	29
93259	AD-36	Gauge & Adapter	29
93260	AD-38	Short Ram Press Adapter	29
93262	AD-41	Gauge & Adapter	29
93263	AD-43	3/4 Ton Cap. Swivel Grab Hook	29
93264	AD-42	Front End Adapter	29
93265	AD-44	1 Ton Cap. Swivel Grab Hook	29
93266	AD-45	2 Ton Cap. Swivel Grab Hook	29

New No.	Previous No.	Description	Page No.
93268	AD-47	Lifting Saddles	29
93269	AD-48	"V" Adapter	29
93270	AD-49	1 Ton Cap. Sling Adapter For Cranes	29
93271	AD-50	2 Ton Cap. Sling Adapter For Cranes	29
93275	——	30 Ton Cap. Bearing Separator	29
93279	——	Door And Bumper Handler	23
93282	——	Transmission Head For Engine Stands	29
93283	——	Outbd. Mtr. Head For Engine Stands	29
93284	——	VW Engine Stand Adapter	29
93291	H-502	1 Qt. Hydraulic Jack Oil	29
93292	H-503	1 Gal. Hydraulic Jack Oil	29
93293	H-504	5 Gal. Hydraulic Jack Oil	29
93450	——	Truck Wheel Chocks	26
93454	AD-26	Mounting Well For Crane	29
93471	J-210	3/4 Ton Cap. Comp. Car Scissors Jack	28
93472	J-110	1-1/2 Ton Cap. Scissors Jack	28
93479	J-425	3/4 Ton Cap. Tripod Screw Bumper Jack	28
93489	J-218	3/4 Ton Cap. Ratchet Bumper Jack	28
93494	J-213	1-1/4 Ton Cap. Ratchet Bumper Jack	28
93495	J-219	1 Ton Cap. Bipod Screw Bumper Jack	28
93496	——	1 Ton Cap. Ratchet Bumper Jack	28
93504	——	2 Ton Cap. Fixed Height Jack Stands	26
93505	J-892	2 Ton Cap. Jack Stands	26
93506	J-202	3 Ton Cap. Jack Stands	26
93510	J-203	3 Ton Cap. Jack Stands	26
93513	J-195	2-1/2 Ton Cap. Rocker Jack Stands	26
93516	J-895	5 Ton Cap. Jack Stands	26
93519	J-897	7 Ton Cap. Jack Stands	26
93522	J-810	10 Ton Cap. Jack Stands	27
93525	J-833	10 Ton Cap. Jack Stands	27
93530	——	4 Ton Starter Kit	31
93531	——	4 Ton Pump, Std. Ram & Hose Assy.	30
93532	——	4 Ton Rescue Kit	33
93533	——	4 Ton Deluxe Kit	31
93534	——	10 Ton Starter Kit	32
93535	——	10 Ton Pump, Std. Ram & Hose Assy	30
93536	——	10 Ton Rescue Kit	33
93537	——	10 Ton Deluxe Kit	32
93538	——	Body-Jak Display Assortment	3
93542	——	4 Ton Tool Chest	35
93543	——	10 Ton Tool Chest	35
93556	——	Tool Stand	35
93601	J-960	30 Ton Heavy Duty Hyd. Jack	25
93602	J-965	50 Ton Cap. Heavy Duty Hyd. Jack	25
93603	J-970	100 Ton Cap. Heavy Duty Hyd. Jack	25
93615	——	10 Ton Cap. Bench Press	16
93616	J-840	15 Ton Cap. Shop Press	17
93617	AD-33	Press Bed	29
93618	J-842	25 Ton Cap. Shop Press	18
93619	AD-40	Press Bed	29
93621	——	Body-Jak Display Board	3
93630	——	1-1/2 Ton Cap. (Rubber Wheels) Service Jack	4
93632	J-122	1-1/2 Ton Cap. Service Jack	4
93633	J-121	1-1/4 Ton Cap. Road Service Jack	4
93635	——	1-1/4 Ton Cap. Racing Jack	4
93655	J-132	2 Ton Cap. Service Jack	5
93656	J-132R	2 Ton Cap. Service Jack (Rubber Wheels)	5
93657	J-134	4 Ton Cap. Service Jack	6
93658	J-780	10 Ton Cap. Service Jack	7
93663	J-612	2 Ton Cap. Air Op. Hyd. Serv. Jack	5
93664	J-613	4 Ton Cap. Air Op. Hyd. Serv. Jack	6
93665	J-614	10 Ton Cap. Air Operated Hydraulic Service Jack	7
93667	——	4 Ton Cap. Air/Manual Hydraulic Service Jack	6
93686	J-197	2-1/2 Ton Cap. Heavy Duty Air End Lift	11
93688	J-102	1-1/2 Ton Cap. Hyd. End Lift	9
93689	J-103	1-1/2 Ton Cap. Air End Lift	10
93690	J-104	1-1/2 Ton Cap. Hydraulic Roll-To-Car End Lift	9
93691	J-105	1-1/2 Ton Cap. Roll-To-Car Air End Lift	10
93692	J-199	7 Ton Cap. Heavy Duty Air End Lift	12
93711	J-44	1/4 Ton Cap. Mech. Trans. Jack	13
93712	J-798	1/2 Ton Cap. Mech. Trans. Jack	14
93714	J-47	1/4 Ton Cap. Under Hoist Trans. Jack	14
93715	J-794	1 Ton Cap. Mech. Trans. Jack	15
93716	J-45	1/2 Ton Cap. Hyd. Trans. Jack	13
93717	J-795	1 Ton Cap. Hyd. Trans. Jack	15
93729	J-254	20 Ton Cap. Air Op. Hyd. High Lift Truck Jack	8
93730	J-255	20 Ton Cap. Air Op. Hyd. Medium-Height Truck Jack	8
93731	——	20 Ton Cap. Air Op. Hydraulic Low-Height Truck Jack	8
93765	J-823	3/4 Ton Cap. Wheel Dolly	22
93766	J-824	1-1/4 Ton Cap. Wheel Dolly	22
93770	——	3/8 Ton Cap. Std. Engine Stand	19
93774	——	5/8 Ton Cap. Heavy Duty Eng. Stand	19
93779	——	3/4 Ton Cap. Under Hoist Stand	27
93780	——	25 Ton Cap. Trailer Stabilizing Stand	27
93781	J-700	3/4 Ton Cap. Under Hoist Rocking Stand	27
93784	J-813	1-1/2 Ton Cap. Under Hoist Jack Stand	27
93795	AD-13	High Lift Adapter	29
93803	J-818	1/2 Ton Cap. Truck-Mounted Crane	21
93806	J-814	1/2 Ton Cap. Shop Crane	20
93809	J-815	3/4 Ton Cap. Shop Crane	20
93812	J-816	1 Ton Cap. Shop Crane	20
93815	J-817	2 Ton Cap. Shop Crane	20
93827	J-96	1-3/4 Ton Cap. Mobile End Lift (Air Operated)	11
93993	——	Jack Merchandiser Display	3
93997	——	Jack Merchandiser Stand	3

New Number to Previous Number

New No.	Previous No.
93101	—
93102	—
93103	—
93104	—
93106	—
93107	—
93108	—
93110	—
93111	—
93112	—
93116	—
93117	—
93118	—
93119	—
93120	—
93121	—
93122	—
93123	—
93124	—
93125	—
93126	—
93127	—
93128	—
93129	—
93130	—
93131	—
93132	—
93133	—
93134	—
93135	—
93136	—
93137	—
93138	—
93139	—
93140	—
93141	—
93142	—
93160	—
93161	—
93162	—
93163	—
93164	—
93165	—
93166	—
93167	—
93168	—
93169	—
93170	—
93171	—
93172	—
93173	—
93174	—
93175	—
93176	—
93177	—
93178	—
93179	—
93180	—
93181	—
93182	—
93183	—
93184	—
93185	—
93186	—
93187	—
93188	—
93189	—
93190	—
93191	—
93193	—
93194	—
93195	—
93197	—
93198	—
93199	—
93200	—
93225	J-906
93226	J-925
93227	J-930
93228	J-935
93229	J-945
93230	—
93233	J-953
93234	—
93238	J-901
93239	—
93240	—
93241	—
93242	—
93243	—
93244	—
93246	AD-31
93247	AD-34
93249	AD-37
93250	AD-10
93251	AD-11
93254	—
93255	AD-20
93256	AD-21
93258	AD-29
93259	AD-36
93260	AD-38
93262	AD-41
93263	AD-43
93264	AD-42
93265	AD-44
93266	AD-45
93268	AD-47
93269	AD-48
93270	AD-49
93271	AD-50
93275	—
93279	—
93282	—
93283	—
93284	—
93291	H-502
93292	H-503
93293	H-504
93450	—
93454	AD-26
93471	J-210
93472	J-110
93479	J-425
93489	J-218
93494	J-213
93495	J-219
93496	—
93504	—
93505	J-892
93506	J-202
93510	J-203
93513	J-195
93516	J-895
93519	J-897
93522	J-810
93525	J-833
93530	—
93531	—
93532	—
93533	—
93534	—
93535	—
93536	—
93537	—
93538	—
93542	—
93543	—
93556	—
93601	J-960
93602	J-965
93603	J-970
93615	—
93616	J-840
93617	AD-33
93618	J-842
93619	AD-40
93621	—
93630	—
93632	J-122
93633	J-121
93635	—
93655	J-132
93656	J-132R
93657	J-134
93658	J-780
93663	J-612
93664	J-613
93665	J-614
93667	—
93686	J-197
93688	J-102
93689	J-103
93690	J-104
93691	J-105
93692	J-199
93711	J-44
93712	J-798
93714	J-47
93715	J-794
93716	J-45
93717	J-795
93729	J-254
93730	J-255
93731	—
93765	J-823
93766	J-824
93770	—
93774	—
93779	—
93780	—
93781	J-700
93784	J-813
93795	AD-13
93803	J-818
93806	J-814
93809	J-815
93812	J-816
93815	J-817
93827	J-96
93993	—
93997	—

Previous Number to New Number

Previous No.	New No.
J-44	93711
J-45	93716
J-47	93714
J-96	93827
J-102	93688
J-103	93689
J-104	93690
J-105	93691
J-110	93472
J-121	93633
J-122	93632
J-132	93655
J-132R	93656
J-134	93657
J-195	93513
J-197	93686
J-199	93692
J-202	93506
J-203	93510
J-210	93471
J-213	93494
J-218	93489
J-219	93495
J-254	93729
J-255	93730
J-425	93479
J-612	93663
J-613	93664
J-614	93665
J-700	93781
J-780	93658
J-794	93715
J-795	93717
J-798	93712
J-810	93522
J-813	93784
J-814	93806
J-815	93809
J-816	93812
J-817	93815
J-818	93803
J-823	93765
J-824	93766
J-833	93525
J-840	93616
J-842	93618
J-892	93505
J-895	93516
J-897	93519
J-901	93238
J-906	93225
J-925	93226
J-930	93227
J-935	93228
J-945	93229
J-953	93233
J-960	93601
J-965	93602
J-970	93603
AD-10	93250
AD-11	93251
AD-13	93795
AD-20	93255
AD-21	93256
AD-26	93454
AD-29	93258
AD-31	93246
AD-33	93617
AD-34	93247
AD-36	93259
AD-37	93249
AD-38	93260
AD-40	93619
AD-41	93262
AD-42	93264
AD-43	93263
AD-44	93265
AD-45	93266
AD-47	93268
AD-48	93269
AD-49	93270
AD-50	93271
H-502	93291
H-503	93292
H-504	93293

Service Branches and Repair Depots

WALKER®

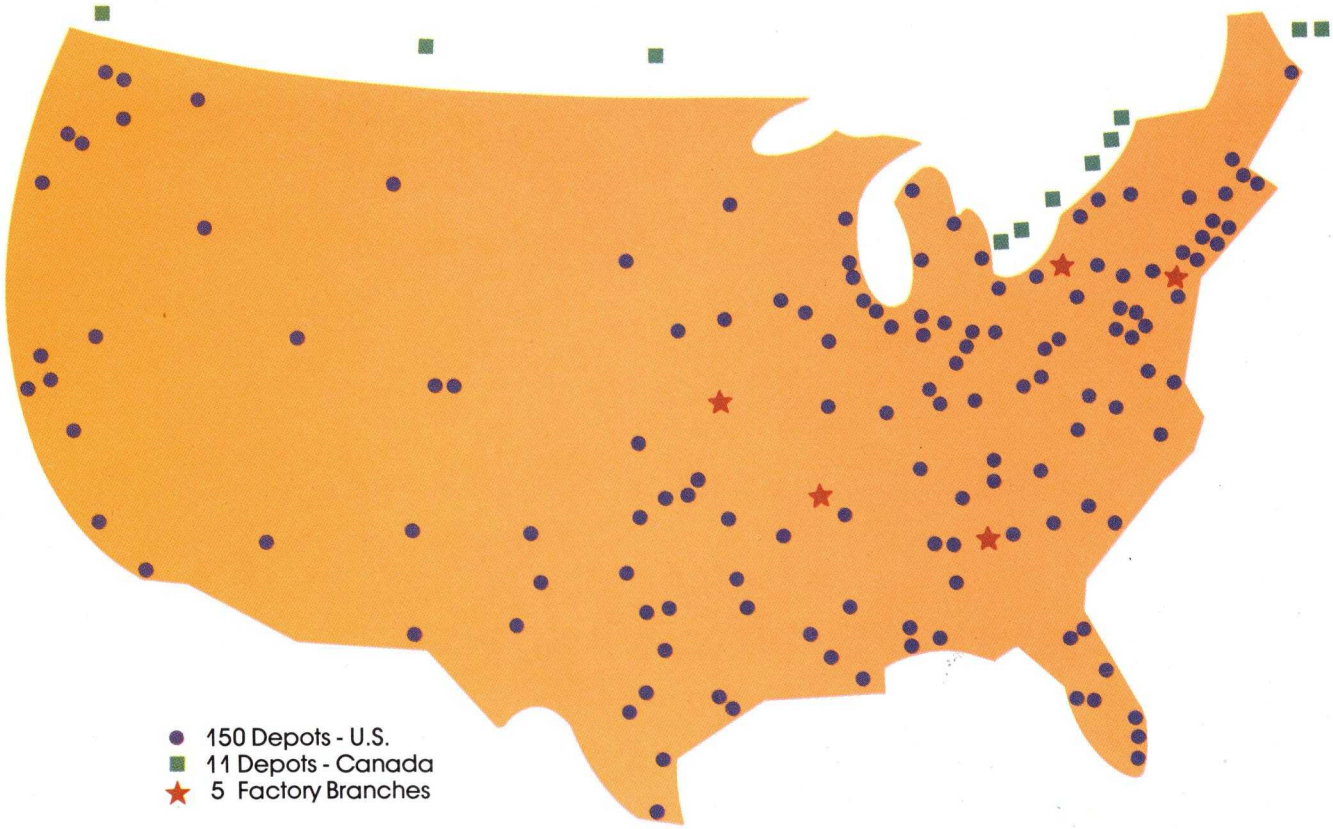

Hard-working equipment needs occasional attention. And when you need service, you want your equipment repaired properly and back to work fast. That's why we have our service organization set up to give you quick service with dependable parts, repair, and exchange units.

We have five company-owned Service Branches to back up more than 150 authorized Repair Depots with parts, exchange units and engineering information to solve critical situations. Our service capabilities are geared to give you results when and where you need them.

We build our equipment to work. But if it does need repair, we have the people and the systems to get your equipment back into service quickly. We want to give you good service on our products.

LIMITED WARRANTY

The manufacturer warrants jacks and related service equipment manufactured by it to be free from defects in materials or workmanship for a period of 90 days from date of delivery to the final purchaser. The equipment must be submitted with proof of purchase date, transportation charges prepaid to the manufacturer or its designated Field Service Depots for inspection. The manufacturer will repair or replace the product parts found to be defective.

This warranty does not apply to parts damaged from accident, overload, or abuse, nor does it apply to any product which has been altered or used with special attachments other than recommended by the manufacturer.

THE MANUFACTURER SHALL NOT BE LIABLE FOR ANY CONSEQUENTIAL DAMAGES FOR BREACH OF ANY WRITTEN OR IMPLIED WARRANTY ON ANY JACK OR RELATED SERVICE EQUIPMENT.

"The pictures shown in this catalog are for illustrative purposes only and may not necessarily depict the exact configuration of the product; nor are they intended to replace any instructions provided with the product. All items shown or described herein are subject to changes in design, materials and specifications without notice. For information in this regard, please contact the Jack Product Manager, Walker Manufacturing, 1201 Michigan Boulevard, Racine, Wisconsin 53402."

Walker Manufacturing
A Tenneco Company

1201 Michigan Boulevard
Racine, Wisconsin 53402

Distributed by:

Printed in U.S.A.

WALKER® JACKS & BODY-JAK T.M. EQUIPMENT

WEATHERLY #920

J-77-2A

U.S. SUGGESTED DEALER PRICE LIST

Suggested PRICE LIST
Effective — September, 1977

SUPERSEDES PRICE LIST J-77-2
DATED May, 1977

Subject to change without notice
Applies throughout the United States
Covering items in Catalog J-7500 and Supplements J-7516 and J-7622

Walker No.	Sugg. List Price	Sugg. Dealer Price	Std. Pkg.	Capacity (Tons)	Description
93101		$ 57.85	1	4	Hydraulic Pump
93102		77.15	1	10	Hydraulic Pump
93103		200.00	1		Air Operated Hydraulic Pump
93104		202.85	1		Air Operated Hydraulic Pump
93106		50.00	1	4	Short Ram w/Extension Screw
93107		59.30	1	4	Standard Ram
93108		48.55	1	1	Hydraulic Spreader
93110		75.70	1	10	Short Ram w/Threaded Attachment
93111		80.70	1	10	Standard Ram
93112		113.55	1	10	Long Ram
93116		3.55	1	4	"V" Head
93117		4.05	1	4	Ram Toe
93118		5.30	1	4	Body Toe
93119		8.85	1	4	Offset Head
93120		3.55	1	4	Spring Spreader
93121		5.70	1	4	Flat Head
93122		3.80	1	4	Concave Head
93123		7.70	1	4	Chain Attachment
93124		5.30	1	4	Crowned Dolly
93125		4.50	1	4	3" Tube Extension
93126		4.85	1	4	6" Tube Extension
93127		5.65	1	4	12" Tube Extension
93128		6.35	1	4	15" Tube Extension
93129		7.15	1	4	18" Tube Extension
93130		8.80	1	4	Rubber Head
93131		22.20	1	4	Body Spoon
93132		2.15	1	4	Nipple
93133		15.55	1	4	Chain & Hook
93134		3.95	1	4	Male Adapter
93135		5.15	1	4	Female Adapter
93136		4.85	1	4	Snap-in Connector
93137		1.20	1	4	Lock Pin
93138		7.65	1	4	Coupler—Ram Half
93139		7.50	1	4	Coupler—Hose Half
93140		13.50	1	4	Coupler—Complete
93141		22.05	1	4	6' Hose
93142		5.45	1	4	Jack Base
93160		9.80	1	10	Offset Head
93161		13.55	1	10	Chain Attachment
93162		8.70	1	10	Flat Head
93163		7.20	1	10	Ram Toe
93164		5.65	1	10	Spring Spreader
93165		4.45	1	10	Concave Head
93166		5.55	1	10	"V" Head
93167		8.30	1	10	Clamp Toe
93168		9.00	1	10	Body Toe
93169		9.15	1	10	Jack Base
93170		2.85	1	10	Nipple
93171		7.70	1	10	6" Tube Extension
93172		10.20	1	10	12" Tube Extension
93173		11.85	1	10	15" Tube Extension
93174		13.50	1	10	18" Tube Extension
93175		8.65	1	10	Smooth Ram Cap
93176		27.85	1	10	Chain & Hook
93177		28.20	1	10	Body Spoon

Walker No.	Sugg. List Price	Sugg. Dealer Price	Std. Pkg.	Capacity (Tons)	Description
93178		$ 15.30	1	10	5″ Rubber Head
93179		7.85	1	10	Male Adapter
93180		9.80	1	10	Female Adapter
93181		9.80	1	10	Snap-in Connector
93182		1.80	1	10	Lock Pin
93183		8.70	1	10	Coupler—Ram Half
93184		8.70	1	10	Coupler—Hose Half
93185		16.50	1	10	Coupler—Complete
93186		29.15	1	10	6′ Hose
93187		9.15	1	10	3″ Rubber Head
93188		34.35	1	10	Slip Set Extension
93189		51.45	1		Valve
93190		98.55	1		Gauge
93191		2.45	1		Close Nipple
93193		7.95	1		Reducing Coupling
93194		4.30	1		Reducing Bushing
93195		7.00	1		Coupling
93197		7.80	1		90 Degree Elbow
93198		16.50	1		Street Elbow
93199		10.70	1		Tee
93200		14.55	1		Cross
93225	$35.70	25.00	1	1½	Portable Hydraulic Jack
93226	57.15	40.00	1	3	Portable Hydraulic Jack
93227	69.35	48.55	1	5	Portable Hydraulic Jack
93228	83.30	58.30	1	8	Portable Hydraulic Jack
93229	105.05	73.55	1	12	Portable Hydraulic Jack
93230		90.95	1	15	Shop Press Jack
93233		118.55	1	20	Portable Hydraulic Jack
93234		146.00	1	25	Shop Press Jack
93238	75.50	52.85	1	1½	High-Lift Portable Hydraulic Jack
93239		44.30	1	1½	High-Lift Portable Hydraulic Jack
93240		41.15	1	10	Bearing Separator
93241		14.35 pr.	1 pr.		Slotted Bumper Finger
93242		24.05 pr.	1 pr.	15	Arbor Plates for 15 ton Press
93243		38.45 pr.	1 pr.	25	Arbor Plates for 25 ton Press
93244		21.80 pr.	1 pr.		Bearing Separator Support Set
93246▲		17.85	1		Powerglide Transmission Adapter
93247		8.80	1	1	Safety Shield
93250		73.45	1		Differential Adapter
93251		34.30	1		Allison Transmission Adapter
93254		72.85	1	17	Bearing Separator
93255		22.20	1		5′ Chain: Slip & Grab Hook
93256		41.30	1		Barrel Hook
93258		41.55	1		Toronado Transmission Adapter
93259		80.00	1		Gauge & Adapter
93260		14.30	1		Short Ram Press Adapter
93262		104.30	1		Gauge & Adapter
93263		75.60	1	¾	Swivel Grab Hook
93265		18.55	1	1	Swivel Grab Hook
93266		30.35	1	2	Swivel Grab Hook
93269		25.45	1		"V" Adapter
93270		114.85	1	1	Sling Adapter for Cranes
93271		188.95	1	2	Sling Adapter for Cranes
93275		129.35	1	30	Bearing Separator
93279		108.85	1		Door & Bumper Handler
93282▲		92.85	1	¼	Transmission Head for Engine Stands
93283		56.05	1	⅜	Outboard Motor Head for Engine Stands
93284		108.60	1		VW Engine Stand Adapter
93291	3.80	2.65	2		Quart Hydraulic Jack Oil
93292	10.65	7.45	4		Gallon Hydraulic Jack Oil
93293		24.95	1		5 Gallons Hydraulic Jack Oil
93450		60.45 pr.	1 pr.		Truck Wheel Chocks
93454		46.45	1		Mounting Well for Crane
93471	24.80	17.35	1	¾	Compact Car Scissors Jack
93472	35.00	24.50	5	1½	Scissors Jack
93479	32.85	23.00	1	¾	Tripod Screw Bumper Jack
93489	21.95	15.35	10	¾	Ratchet Bumper Jack
93495	46.70	32.70	1	1	Bi-pod Screw Bumper Jack

▲Available Until Inventory Depleted

Walker No.	Sugg. List Price	Sugg. Dealer Price	Std. Pkg.	Capacity (Tons)	Description
93496	$32.65	$ 22.85	1	1	Ratchet Bumper Jack
93504	21.45 pr.	15.00 pr.	1 pr.	2 ea.	Jack Stands, Fixed Height
93505		41.70 pr.	1 pr.	2 ea.	Jack Stands
93506		23.45 pr.	1 pr.	3 ea.	Jack Stands
93510		35.85 pr.	1 pr.	3 ea.	Jack Stands
93513		62.15 pr.	1 pr.	2½ ea.	Rocker Jack Stands
93516		58.95 pr.	1 pr.	5 ea.	Jack Stands
93519		83.30 pr.	1 pr.	7 ea.	Jack Stands
93522		146.45 pr.	1 pr.	10 ea.	Jack Stands
93525		300.70 pr.	1 pr.	10 ea.	Jack Stands
93530		208.60	1	4	Starter Kit
93531		141.45	1	4	Pump, St'd. Ram & Hose Assembly
93532		388.00	1	4	Rescue Kit
93533		298.00	1	4	Deluxe Kit
93534		322.85	1	10	Starter Kit
93535		198.60	1	10	Pump, St'd. Ram & Hose Assembly
93536		581.95	1	10	Rescue Kit
93537		498.00	1	10	Deluxe Kit
93538			1		Body-Jak Display Assortment
93542		60.85	1		Tool Chest
93543		76.80	1		Rescue Kit Tool Chest-10 Ton
93556		139.00	1		Tool Stand
93601		249.45	1	30	Heavy Duty Hydraulic Jack
93602		410.00	1	50	Heavy Duty Hydraulic Jack
93603		800.00	1	100	Heavy Duty Hydraulic Jack
93615		178.60	1	10	Bench Press
93616		320.45	1	15	Shop Press
93617		46.45	1		Press Bed
93618		430.70	1	25	Shop Press
93619		72.55	1		Press Bed
93621			1		Body-Jak Display Board
93630		300.80	1	1½	Service Jack (Rubber Wheels)
93632		267.15	1	1½	Service Jack
93633		208.60	1	1¼	Road Service Jack
93635		300.00	1	1¼	Racing Jack
93636		127.15	1	1	Service Jack
93652		378.60	1	2	Short-Chassis Service Jack
93655		435.70	1	2	Service Jack
93656		453.45	1	2	Service Jack (Rubber Wheels)
93657		568.60	1	4	Service Jack
93660		968.60	1	10	Service Jack
93662		1075.75	1	10	Air/Manual Hyd. Service Jack
93666		471.45	1	2	Short-Chassis Air/Manual Hd. Service Jack
93667		675.75	1	4	Air-Manual Hydraulic Service Jack
93688		374.30	1	1½	Hydraulic End Lift
93689		418.60	1	1½	Air End Lift
93692		1084.30	1	7	Heavy Duty Air End Lift
93696		592.50	1	2½	Heavy Duty Air End Lift
93711		362.70	1	¼	Mechanical Transmission Jack
93712		377.85	1	½	Mechanical Transmission Jack
93714		707.15	1	¼	Under-Hoist Transmission Jack
93715		732.90	1	1	Mechanical Heavy Duty Transmission Jack
93716		400.00	1	½	Hydraulic Transmission Jack
93717		750.00	1	1	Hydraulic Heavy Duty Transmission Jack
93729		680.00	1	20	Air Operated Hyd. Hi-Lift Truck Jack
93730		654.30	1	20	Air Operated Hyd. Medium-Height Truck Jack
93731		660.00	1	20	Air Operated Hyd. Low-Height Truck Jack
93736		855.75 pr.	1 pr.	7 ea.	Twin Truck Air Lifts
93765		447.15	1	¾	Wheel Dolly
93766		547.15	1	1¼	Wheel Dolly
93770		219.30	1	⅜	Standard Engine Stand
93774		307.15	1	⅝	Heavy Duty Engine Stand
93779		58.95	1	¾	Under-Hoist Stand
93780		105.70	1	25	Trailer Stabilizing Stand
93781		90.00	1	¾	Under-Hoist Rocking Stand
93784		107.15	1	1½	Under-Hoist Jack Stand
93795		38.60	1		Hi-Lift Adapter
93803		340.00	1	½	Truck Mounted Crane
93806		468.60	1	½	Shop Crane
93809		564.30	1	¾	Shop Crane

Walker No.	Sugg. List Price	Sugg. Dealer Price	Std. Pkg.	Capacity (Tons)	Description
93812		$842.90	1	1	Shop Crane
93815		1162.90	1	2	Shop Crane
93827		964.30	1	1¾	Mobile End Lift (Air Operated)

LIMITED WARRANTY

Walker Manufacturing Company warrants, to the final purchaser, jacks and related service equipment manufactured by it to be free from defects in material and workmanship for a period of 90 days from date of sale. If a jack or related equipment is determined to be defective during the warranty period, it will be repaired or replaced without charge provided that the equipment is shipped, transportation charges prepaid, with proof of date of purchase, to Walker Manufacturing Company at the address shown below or to a designated Field Service Depot.

This warranty does not apply to parts damaged from accident, overload, or abuse, nor does it apply to any product which has been altered or used with special attachments other than recommended by the manufacturer or their equivalent.

WALKER MANUFACTURING COMPANY SHALL NOT BE LIABLE FOR ANY INCIDENTAL OR CONSEQUENTIAL DAMAGES FOR BREACH OF ANY EXPRESS OR IMPLIED WARRANTY ON ANY JACK OR RELATED SERVICE EQUIPMENT.

Some states do not allow the exclusion or limitation of incidental or consequential damages, so the above limitation or exclusion may not apply to you. This warranty gives you specific legal rights, and you may also have other rights which vary from state to state.

Walker Manufacturing Company
1201 Michigan Boulevard
Racine, Wisconsin 53402

Manufacturing and Service Facilities: Walker Manufacturing Co.
2601 Commerce Drive, Jonesboro, Arkansas 72401

Walker Manufacturing
A Tenneco Company

1201 Michigan Boulevard
Racine, Wisconsin 53402

Printed in U.S.A.